Electric Drives and Controls | Hydraulics | Linear Motion and Assembly Technologies | Pneumatics | Service

Rexroth
Bosch Group

# Ball Rail Systems NRFG

R310EN 2226 (2011.04)

The Drive & Control Company

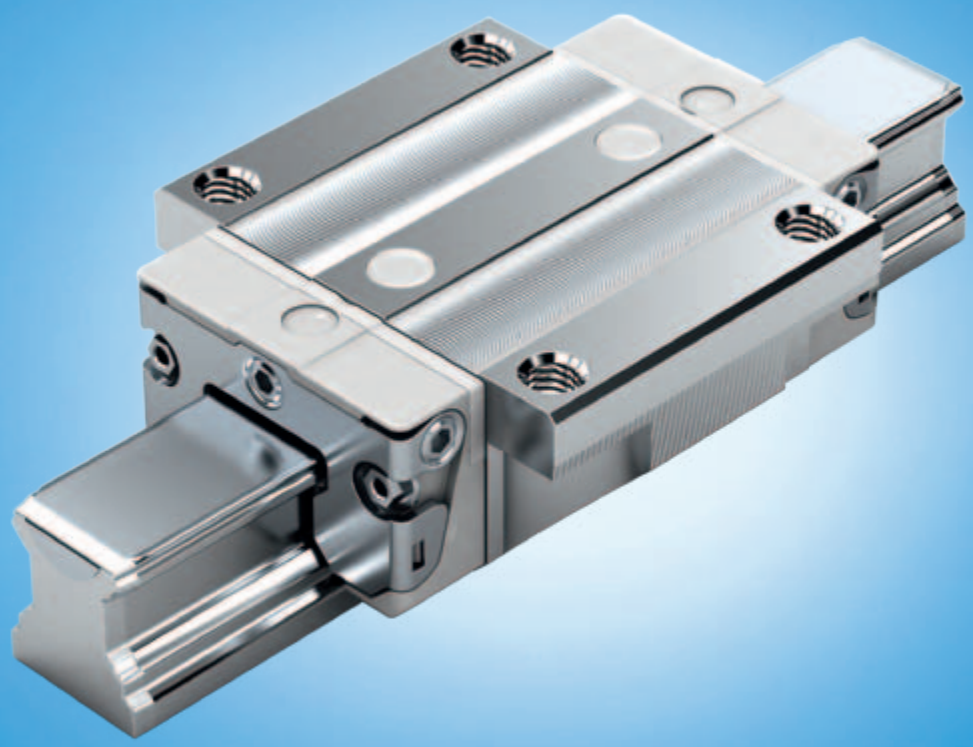

# Ball Rail Systems NRFG

**General Product Description** **4**
Product Description, Ball Rail Systems NRFG 4
Product Overview, Ball Runner Blocks with Load Capacities and Moments 5
Product Overview, Ball Guide Rails with Rail Lengths 5
Material specifications 6
Directives and standards 8
Hazard analysis 12
Product requirements for specific areas 14
Cleaning 16
Hygienic design 17
**Standard Ball Runner Blocks NRFG** **18**
Product Description 18
FNS – Flanged, normal, standard height 20
FLS – Flanged, long, standard height 22
FKS – Flanged, short, standard height 24
SNS – Slimline, normal, standard height 26
SLS – Slimline, long, standard height 28
SKS – Slimline, short, standard height 30
**Ball Guide Rails, Resist NR II** **32**
Product Description, Ball Guide Rails SNS 32
Ordering Examples 33
SNS with Cover Strip, Screws and Washers 34
SNS with Plastic Mounting Hole Plugs 36
SNS for mounting from below 38
**Lubrication** **40**
Notes on Lubrication 40
Lubrication using a grease gun 41

# Product Description, Ball Rail Systems NRFG

## General notes

- Ball Rail System NRFG for use in the packaging industry and food industry areas.
- For further information, additional technical data and maintenance notes, see the main catalog Ball Rail Systems R310..2226.
- **Combinations of different accuracy classes**
  Combining ball guide rails and runner blocks of different accuracy classes results in different tolerances for dimensions H and $A_3$. See “Accuracy Classes and their Tolerances” in the main catalog Ball Rail Systems R310..2226.

## Intended use

- The Ball Rail System NRFG is a linear guide capable of absorbing forces from all transverse directions and moments about all axes. The Ball Rail System NRFG is intended exclusively for guiding and positioning tasks when installed in a machine.
- The product is intended exclusively for professional use and not for private use.
- Use for the intended purpose also includes the requirement that users must have read and understood the related documentation completely, in particular the “Safety instructions”.
- Use of the product in any other way than as described under “Intended use” is considered to be misuse and is therefore not permitted.
- Bosch Rexroth AG will not accept any liability for injury or damage caused by misuse of the product. The risks associated with any misuse of the product shall be borne by the user alone.

## General safety instructions

- The safety rules and regulations of the country in which the product is used must be complied with.
- All applicable accident prevention and environmental regulations must be adhered to.
- The product may only be used when it is in technically perfect condition.
- The technical data and environmental conditions stated in the product documentation must be complied with.
- The product must not be put into service until it has been verified that the final product (for example a machine or system) into which the product has been installed complies with the country-specific requirements, safety regulations and standards for the application.
- Rexroth Ball Rail Systems may not be used in zones with potentially explosive atmospheres as defined in the ATEX directive 94/9/EC.
- Rexroth Ball Rail Systems must never be altered or modified. The user may only perform the work described in the “Quick User Guide” or the “Mounting Instructions for Ball Rail Systems”. The product must never be disassembled.

# Product Overview, Ball Runner Blocks with Load Capacities and Moments

| Ball runner blocks | | Page | Size | 15 | 20 | 25 | 30 | 35 |
|---|---|---|---|---|---|---|---|---|
| | | | | Load capacities (N) and load moments (Nm) | | | | |
| Standard Ball Runner Blocks made of NRFG[2] | FNS R2001 | 18 | C [1] | 5 100 | 12 300 | 15 000 | 20 800 | 27 600 |
| | | | $C_0$ [1] | 9 300 | 16 900 | 21 000 | 28 700 | 37 500 |
| | | | $M_t$ [1] | 63 | 205 | 270 | 460 | 760 |
| | SNS R2011 | 24 | $M_{t0}$ [1] | 90 | 215 | 295 | 500 | 805 |
| | | | $M_L$ [1] | 34 | 110 | 150 | 245 | 375 |
| | | | $M_{L0}$ [1] | 49 | 115 | 165 | 265 | 390 |
| | FLS R2002 | 20 | C [1] | 8 500 | 16 000 | 20 000 | 26 300 | 36 500 |
| | | | $C_0$ [1] | 14 000 | 24 400 | 31 600 | 40 100 | 56 200 |
| | | | $M_t$ [1] | 82 | 265 | 365 | 590 | 1 025 |
| | SLS R2012 | 26 | $M_{t0}$ [1] | 132 | 310 | 450 | 695 | 1 210 |
| | | | $M_L$ [1] | 64 | 190 | 290 | 420 | 710 |
| | | | $M_{L0}$ [1] | 104 | 230 | 350 | 495 | 840 |
| | FKS R2000 | 22 | C [1] | 4 500 | 8 200 | 10 500 | 14 500 | 19 300 |
| | | | $C_0$ [1] | 5 600 | 9 400 | 12 600 | 17 200 | 22 400 |
| | | | $M_t$ [1] | 44 | 125 | 195 | 320 | 545 |
| | SKS R2010 | 28 | $M_{t0}$ [1] | 55 | 115 | 180 | 295 | 485 |
| | | | $M_L$ [1] | 16 | 45 | 70 | 110 | 170 |
| | | | $M_{L0}$ [1] | 19 | 40 | 65 | 105 | 150 |

# Product Overview, Ball Guide Rails with Rail Lengths

| Ball guide rails | | Page | Size 15 | 20 | 25 | 30 | 35 |
|---|---|---|---|---|---|---|---|
| | | | Rail length (mm) | | | | |
| Standard Ball Guide Rails Resist NR II[2] | 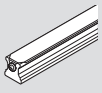 SNS R2045 .3. .. For mounting from above, with cover strip; secured with screws and washers | 32 | 1 856 | 3 836 | 3 836 | 3 836 | 3 836 |
| | SNS R2045 .0. .. For mounting from above, with plastic mounting hole plugs | 34 | 1 856 | 3 836 | 3 836 | 3 836 | 3 836 |
| | SNS R2047 .0. .. For mounting from below | 36 | 1 856 | 3 836 | 3 836 | 3 836 | 3 836 |

Determination of the dynamic load capacities and moments is based on a travel life of 100,000 m per ISO 14728-1.
Often only 50,000 m are actually stipulated. For comparison: Multiply values **C**, $\mathbf{M_t}$ and $\mathbf{M_L}$ from the table by 1.26.

1) Load capacities for Ball Runner Block without ball chain.
2) All steel parts made of corrosion-resistant steel as per EN 10088.

General Product Description

# Material specifications

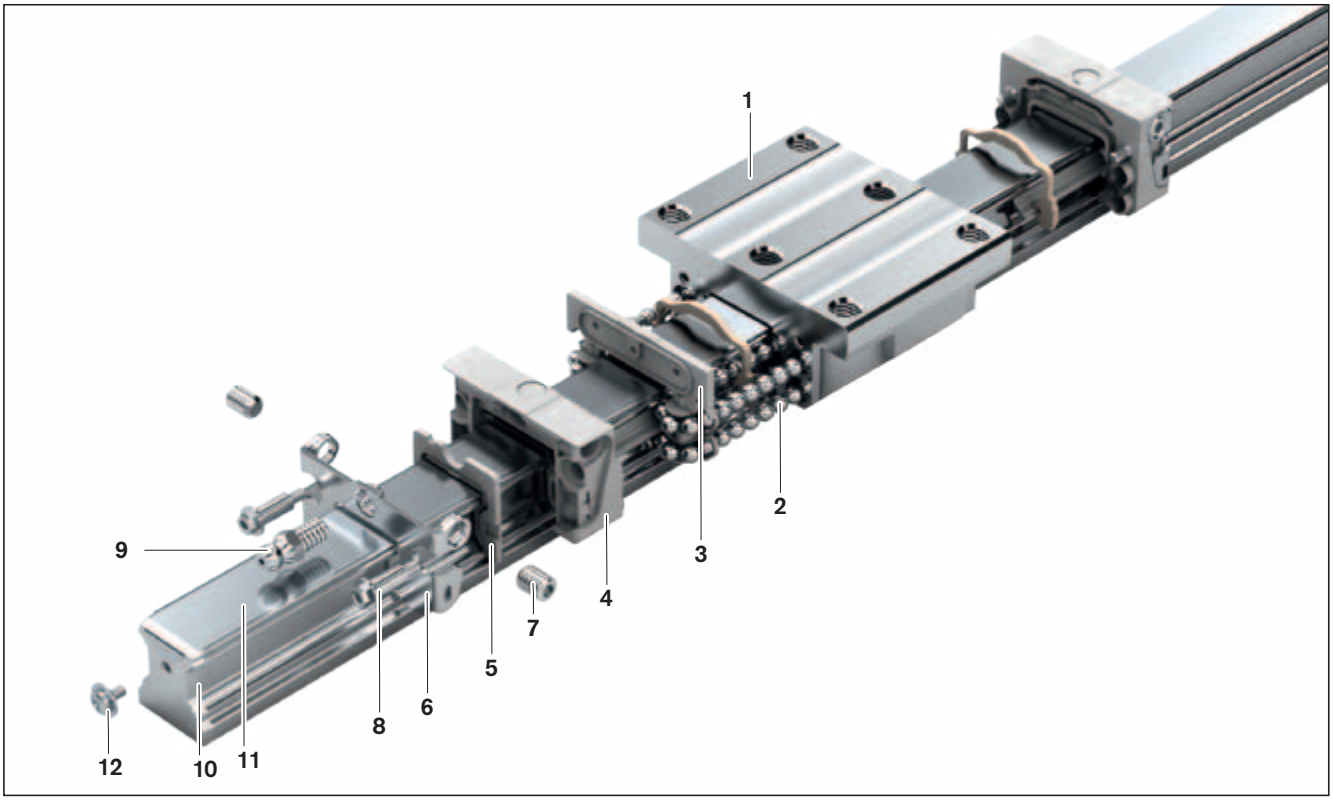


| Item | Ball runner block | NRFG |
|---|---|---|
| 1 | Ball runner block body[1)] | Corrosion-resistant steel 1.4122 |
| 2 | Balls[1)] | Corrosion-resistant steel 1.4112 |
| 3 | Recirculation plate[2)] | Plastic TPE natural |
| 4 | Ball guide[2)] | Plastic POM natural |
| 5 | Sealing plate[2)] | Plastic TPE natural |
| 6 | Threaded plate[1)] | Corrosion-resistant steel 1.4306 |
| 7 | Set screw[1)] | Corrosion-resistant steel 1.4301 |
| 8 | Flanged screws[1)] | Corrosion-resistant steel 1.4303 |
| 9 | Lube nipple[1)] | Corrosion-resistant steel 1.4305 |

| Item | Ball guide rail | Resist NR II |
|---|---|---|
| 10 | Ball guide rail[3)] | Corrosion-resistant steel 1.4116 |
| 11 | Cover strip[1)] | Corrosion-resistant steel 1.4310 |
| 12 | Screw and washer[1)] | Corrosion-resistant steel 1.4301 |

1) Steel parts made of corrosion-resistant steel per DIN EN 10088 and AISI / NSF51
2) Plastic parts made of certified material as per Directive 2002/72/EG* and FDA21CFR
3) Steel parts made of corrosion-resistant steel per DIN EN 10088
* in preparation

# When using Ball Rail Systems NRFG, the following points must be noted:

## Influencing factors

Effects on Ball Rail Systems NRFG can vary considerably with temperature, the concentration of active substances, combinations of materials that can function as voltaic elements, and mechanical stresses.

## Exposure

The effect on the material will differ depending on whether exposure is constant or sporadic. Periods of standstill can result in drying of process media, which could have an adverse effect on seals when restarting the system. Plastic parts are not resistant to UV radiation. Discoloration may occur. When exposed to UV rays for longer periods, the material has a tendency to become brittle.

## Materials/media

Generally, a material can be well-suited or ill-suited to the environment, depending among other things on how the component is used. The plastic parts are resistant to weak acids, alkalis, organic solvents, oils and alcohols. They are not resistant to strong acids ($pH < 4$) and oxidizing media. The plastic parts have a standard flammability rating. When the ignition source is removed, the plastic will continue to burn, and melted material will drip down. Formaldehyde may be formed as a result of thermal degradation. At 15%, the oxygen index (that is, the concentration of oxygen that will support combustion) is very low compared to other types of plastics.

# Directives and standards

Rexroth Ball Rail Systems NRFG are suitable for high-dynamic linear applications requiring reliability and precision. Other food and packaging industry demands include the use of approved materials in combination with hygienic design. These are governed by the most stringent standards, which must be fully complied with. The standards can vary significantly worldwide. It is therefore essential to understand the legislation and standards that apply in each particular region.

## International standards

**ISO 14159**

This is a standard on hygiene requirements for the design of machinery. It covers several areas, of which food processing is one. It complies with the 3-A standards and is similar to European Standard EN 1672-2.

**ISO 8086**

A standard on the hygiene regulations for dairy plants. It provides a general guide to monitoring and sampling procedures.

**EN ISO 12100**

This standard is entitled Safety of machinery – General principles for design – Risk assessment and risk reduction. It gives a general overview and contains a guide to the major developments governing machines and their intended use.

**EN ISO 21469**

A standard dealing with Safety of machinery – Lubricants with incidental product contact – Hygiene requirements. It covers the formulation, manufacture, use and handling of lubricants which, during manufacture and processing, can come into incidental contact with products and packaging used in the food, and similar industries.

# European Community - Directives and standards

## Directive 2006/42/EC

The Machinery Directive describes the basic safety and health requirements for the design and manufacture of machinery. The manufacturer of a machine or his authorized representative has a duty to ensure that a risk assessment has been performed in order to determine the health and safety requirements which have to be fulfilled for that machine. The machine must be designed and built with the results of the risk assessment in mind.

## Directive 2001/95/EC

This directive covers general safety requirements for any product placed on the market and intended for consumers, or likely to be used by consumers under reasonably foreseeable conditions, including products that are made available to consumers in the context of service provision for use by them.

## Directive 85/374/EEC

This directive concerns liability for defective products and applies to industrially manufactured movables, irrespective of whether they have been incorporated into another movable or into an immovable or not.

## Directive 76/769/EEC

This directive relates to restrictions on the marketing and use of certain dangerous substances and preparations. “Substances” means chemical elements and their compounds as they occur in the natural state or as produced by industry. "Preparations" means mixtures or solutions composed of two or more substances.

## Directive 2002/72/EC

This directive relates to plastic materials and articles intended to come into contact with foodstuffs. These materials and articles and parts thereof may consist either exclusively of plastics, or multi-layer plastics, or be composed of different types of materials.

# Directives and standards

**German Ordinance 2125-40-46 on articles of daily use**

This regulation specifies which materials are permitted for manufacturing articles of daily use and food packages and specifies limits for migration of contaminants to the human body or out of a packaging into a food.

**EN 1672-2**

Food processing machinery. Basic concepts. Part 2: Hygiene requirements. This standard contains measures for avoiding risk both to the operator (1672-1) and the consumer (1672-2). The standard applies to all machinery used in food production. As well as continuous production it covers batch processing, whether in open or closed processes.

**DIN 10516**

Food hygiene – Cleaning and disinfection. This standard provides guidance on selecting and implementing suitable measures for cleaning and disinfecting machinery and equipment used in the food processing industry.

**DIN 11483**

Dairy installations; cleaning and disinfection. Recommendations for the correct cleaning and disinfection of machinery and equipment in the dairy industry as well as information on suitable disinfecting and cleaning agents.

**EN 415**

Safety of packaging machines. This standard covers the safety requirements for the design, construction, installation, commissioning, operation, adjustment, maintenance, decommissioning and scrapping of various types of packaging machines and equipment.

## Organizations

There are several organizations worldwide that can be contacted for detailed information:

### FDA

The Food and Drug Administration has a mission to promote and protect public health in the United States by helping safe and effective products reach the market in a timely way and by monitoring products for continued safety after they are in use. Published by the FDA, the Code of Federal Regulations is an important reference for approved engineering materials.

Address:
U.S. Food and Drug Administration
10903 New Hamshire Ave.
Silver Spring, MD USA 20993
www.fda.gov

### 3-A

The Sanitary Standards Symbol Administrative Council, known in the industry as the 3-A, grants authorizations to use the 3-A symbol on dairy and food equipment that meets 3-A Sanitary Standards for design and fabrication.
Based in the USA, this organization has considerable experience in setting up voluntary standards for the food processing industry, particularly the dairy industry.

Address:
3-A Sanitary Standards, Inc.
6888 Elm Street, Suite 2D
McLean, Virginia USA 22101
www.3-a.org

### EHEDG

The European Hygienic Engineering & Design Group is an independent group that works on establishing important guidelines and methods of testing for preserving safety in the food production process. The group consists of representatives of machine manufacturing companies and representatives of the relevant authorities.

Address:
EHEDG Secretariat
Avenue Grand Champ 148
1150 Brussels, Belgium
www.ehedg.org

# Hazard analysis

The HACCP System (Hazard Analysis Critical Control Point System) is considered an effective and rational procedure for guaranteeing the safety of food products. The European standard 93/94 EEC stipulates that this risk analysis is to be used in food production.
The aim is not, however, to establish one specific HACCP plan for specific products. Instead, HACCP systems have to be set up by each individual manufacturer and adapted to the specific processing conditions.

## Definitions

### Control Point (CP)

This term signifies each point or each process in a specific food processing system that, if not controlled, will not lead to an unacceptable health hazard[1)].

### Critical Control Point (CCP)

This term signifies each point or each process in a specific food processing system that, if not controlled, can lead to an unacceptable health hazard[1)].

### Special hazards

HACCP should uncover special hazards (biological, chemical and physical).

### Biological hazards

This first hazard class, which incorporates biological or microbiological hazards, can be sub-divided into three more classes: bacteria, viruses and parasites (protozoa and worms).

### Chemical hazards

A chemical is a substance which is either used in a chemical process or results from such a process. All food products are made up of chemicals and all chemicals can, depending on the quantity, be toxic.

### Physical hazards

Physical hazards are often described as external substances or foreign bodies. This includes any physical material that does not occur naturally in food and can lead to illnesses (including psychological trauma) or personal injuries (Corlett, 1991)[2)].

1) cf. UDSA in HACCP basics. See chapter references [4], page 28.
2) cf. Rhodehamel, E. Jeffrey. See chapter references [3], page 28.

## Structure of the HACCP plan

As an example, an HACCP plan can consist of seven parts. Other alternatives are possible.

### Analysis of hazards

All possible risks must be identified and classified according to type. It is also necessary to show how these risks can be avoided.

### Determination of Critical Control Points

The critical control points (CCPs) for each production process have to be determined.

### Establishment of limiting values

For each critical control point the limiting values or criteria have to be established.

### Removing or monitoring CCPs

The first solution is to remove the CCP. If this is not possible, a monitoring system needs to be set up for monitoring the critical control points. (For example, who monitors which CCP, and how often?).

### Stipulating corrective measures

Corrective measures need to be determined in case the limiting values/criteria are not observed.

### Establishing routines

Routines have to be determined to ensure that the stipulated processes and measures are conformed with. (Monitoring of points: Establishing limiting values; Removing or monitoring CCP; Stipulating corrective measures).

### Drawing up of documentation

Documentation must be drawn up on the HACCP system.

# Product requirements for specific areas

Different demands apply to different processing areas. Components used in the food production process must be easy to maintain in order for precautions to be taken against microbiological contamination. This means the components must be easy to clean and must be protected against contamination. As a general rule, Ball Rail Systems NRFG may not come into contact with food.

## Production areas

EN 1672-2 defines three different zones with different requirements.
These will determine the choice of Ball Rail Systems NRFG.

### Food area

This area includes all surfaces that come or could come into contact with food and where there is a risk of food splash returning into the food process. The design must permit good and complete cleaning, with a surface finish which will prevent particles from remaining in small cavities. The surfaces should be self-draining and without poorly accessible crevices or dead spaces.

**The use of Ball Rail Systems NRFG is not permitted because:**
- For design-related reasons, crevices and dead spaces are present.
- Complete cleaning of the NRFG ball runner blocks is not possible.
- The surfaces of the Ball Rail Systems NRFG are not self-draining.
- There is a risk that food splashes could return into the food process.

### Splash area

This includes surfaces where the food may splash or flow along, but where there is no risk of it remaining in the food process.

**The use of Ball Rail Systems NRFG is permitted to a limited extent if:**
- The adjoining structure has a guard or shield protecting the Ball Rail System NRFG from food splashes.
- No sticky or acidic liquids come into contact with the Ball Rail System NRFG.

### Non-food area

**The use of Ball Rail Systems NRFG is permitted in non-food areas when:**
- The areas are not food zones or splash zones.
- The general requirements apply.
- Exposed surfaces are made of corrosion-resistant materials.
- The surfaces are easy to clean and wherever possible self-draining.

## Working zones

Regardless of the type of production area, Rexroth suggests differentiating between dry and wet zones when selecting Ball Rail Systems NRFG.
The following definitions can be used:

### Wet working zones

Areas in which liquid, moist or sticky food flows around machine parts, or areas which are wet-cleaned or disinfected. In such areas, Ball Rail Systems NRFG should have an adjoining structure with a guard or shield.

### Dry working zones

Areas in which no wet media can come into contact with machine parts and where the relative humidity is equal to that of the normal area (up to 70%). The use of Ball Rail Systems NRFG is permitted.

**Where special conditions of use are involved, please consult us.**

⚠ **Ball Rail Systems NRFG have crevices and dead spaces. There is therefore a risk of food residues collecting (e.g. working their way under the cover strip or into the dead spaces in the runner blocks, etc.). For this reason, direct contact of Ball Rail Systems NRFG in the food area is not permitted!**

⚠ **The adjoining structure must be designed so that if the Ball Rail Systems NRFG should fail or be destroyed, no components (e.g. balls, plastic parts, etc.) can come into contact with food.**

⚠ **All steel parts of Ball Rail Systems NRFG are made from corrosion-resistant material as per EN 10088. In exceptional cases of use, corrosion phenomena may, however, still occur.**

# Cleaning

Whether dry or wet cleaning is used, the cleaning process is a basic requirement for hygiene in the food industry.
The choice of materials for machinery and equipment in the food processing and packaging industry also depends on the detergents and cleaning methods used. Good hygienic design enables cleaning to be done in a shorter time, at lower temperatures and with less aggressive detergents, thus saving time and expense. In order to select the right components for a specific application, they must be judged by their ability to withstand the cleaning process. Their degree of corrosion resistance will determine their hygienic suitability.

## Detergents

Cleaning of food machinery and equipment must take place in accordance with the manufacturer's instructions. It is important that materials, detergents and cleaning methods are compatible with each other.

## From its own experience, Rexroth can provide the following information regarding cleaning:

- If POM plastic (polyoxymethylene) is not properly dried after cleaning with acid, there is a risk of formaldehyde being formed. The characteristics of plastics differ from case to case and from grade to grade. The risk of absorption must therefore be considered.
- Phosphoric acid is commonly used in detergents, and low-grade steels such as AISI 420 can only withstand this for short periods.
- However, it must be remembered that detergents usually also contain inhibitors which protect the material.
- One of the biggest risks is galvanic corrosion. This occurs, for example, when stainless steel is placed in contact with aluminum in a wet environment. Aluminum cannot withstand either strongly alkaline or strongly acidic conditions. Its durability may be increased by anodizing or coating, but the improvement obtained will depend on the quality of the surface treatment.
- Hard chromium plating on low-grade stainless steel carries a risk of substrate corrosion, in which case the plating will peel off in flakes.
- In general, surface treatment is good as long as the coating remains intact, but can increase the rate of corrosion if damaged.

## Classification of Ball Rail Systems NRFG

- Corrosion durability class 2
- Hygiene class 3

⚠ **Cleaning of Ball Rail Systems NRFG with high-pressure cleaning equipment or similar is <u>not permitted</u>.**

⚠ **When using detergents or disinfectants, their compatibility with the materials used by Rexroth must be checked with the manufacturer.**

⚠ **After using detergents, the surface of the Ball Rail Systems NRFG must be dried and all residues removed.**

⚠ **Frequent cleaning cycles will affect the lubricants and the relubrication intervals.**
**Where special conditions of use are involved, please consult us.**

# Hygienic design

The following are essential factors to ensure appropriate hygienic design in terms of the risk areas defined, e.g. in the HACCP system.

**Bearings**

Bearings should be mounted outside any food area, unless unavoidable.
Bearings used in food areas must be lubricated with food-grade lubricants and mounted so as to permit free-flow cleaning and disinfection.

**Crevices**

These have a detrimental effect on cleaning due to surface defects such as scratches and cracks. Smooth surfaces appropriate to the operational and hygiene requirements are preferable in this respect.

**Dead spaces**

Spaces in which a product, ingredient, cleaning or disinfecting agents or soil can be retained or incompletely removed during cleaning must be avoided or designed so that they are drainable and easy to clean and disinfect where required.

**Drainage**

A self-draining design and construction of the surface finish so as to prevent liquid from being retained or, if this is not possible, where the residual liquid can be removed by other means.

**Threaded fasteners**

Fasteners such as screws, bolts, rivets etc. are a hygienic concern and shall be avoided if possible, or placed so that they are easy to clean and disinfect.

**Internal angles and corners**

To ensure optimum flow rates of cleaning and disinfecting agents as well as to avoid hazards, corners must be well radiused and small angles avoided.

**Joints**

A direct metal-to-metal joint should be avoided, or if the joint is permanent, it should be continuously welded and free of imperfections.
Dismountable joints must be truly hygienic.

**Seals**

Sealing off or filling in an area to prevent unwanted materials or substances from penetrating or permeating.

Standard Ball Runner Blocks NRFG

# Product Description

## Characteristic features

Ball Runner Blocks NRFG made of corrosion-resistant steel1) are used particularly in applications involving water-based media.
They are also suitable for environments with a relative humidity of over 70% and temperatures above 30°C.
Since they have built-in corrosion protection, ball runner blocks NRFG are also ideal for use in the packaging industry and in areas of the food industry.
Where special conditions of use are involved, please consult us.

## Highlights

- All metal parts made of corrosion-resistant steel
- All plastic parts made of FDA-certified material
- Available in five common sizes
- Excellent dynamic characteristics:
  Travel speed: $v_{max} = 5$ m/s
  Acceleration: $a_{max} = 500$ m/s$^2$
- Same load capacities in all four main load directions
- Available in accuracy class H up to preload class C2 (preload = 8% C)
- Long-term lubrication, up to several years
- Minimum quantity lubrication system with integrated reservoir for oil lubrication
- Lube ports with metal threads on all sides

## Further highlights

- Limitless interchangeability; all ball guide rail versions can be combined at will with all ball runner block versions within each accuracy class
- Optimum system rigidity through preloaded O-arrangement
- Attachments can be bolted to the ball runner blocks from above or below2)
- Improved rigidity under lift-off and side loading conditions when additional mounting screws are used in the two holes provided at the center of the runner block2)
- Mounting threads provided on end faces for fixing of all add-on elements
- High rigidity in all load directions – permits applications with just one runner block per rail
- Integrated all-round sealing
- Optimized entry-zone geometry and high number of balls per track minimizes variation in elastic deflection
- Smooth, light running thanks to optimized ball recirculation and ball guidance
- Ball Guide Rails Resist NR II are available with or without cover strip and for mounting from above or below

1) Ball runner block body, ball guide rail and all steel parts made from corrosion-resistant steel per EN 10088
2) depends on type

## Overview of Standard Ball Runner Block models in NRFG

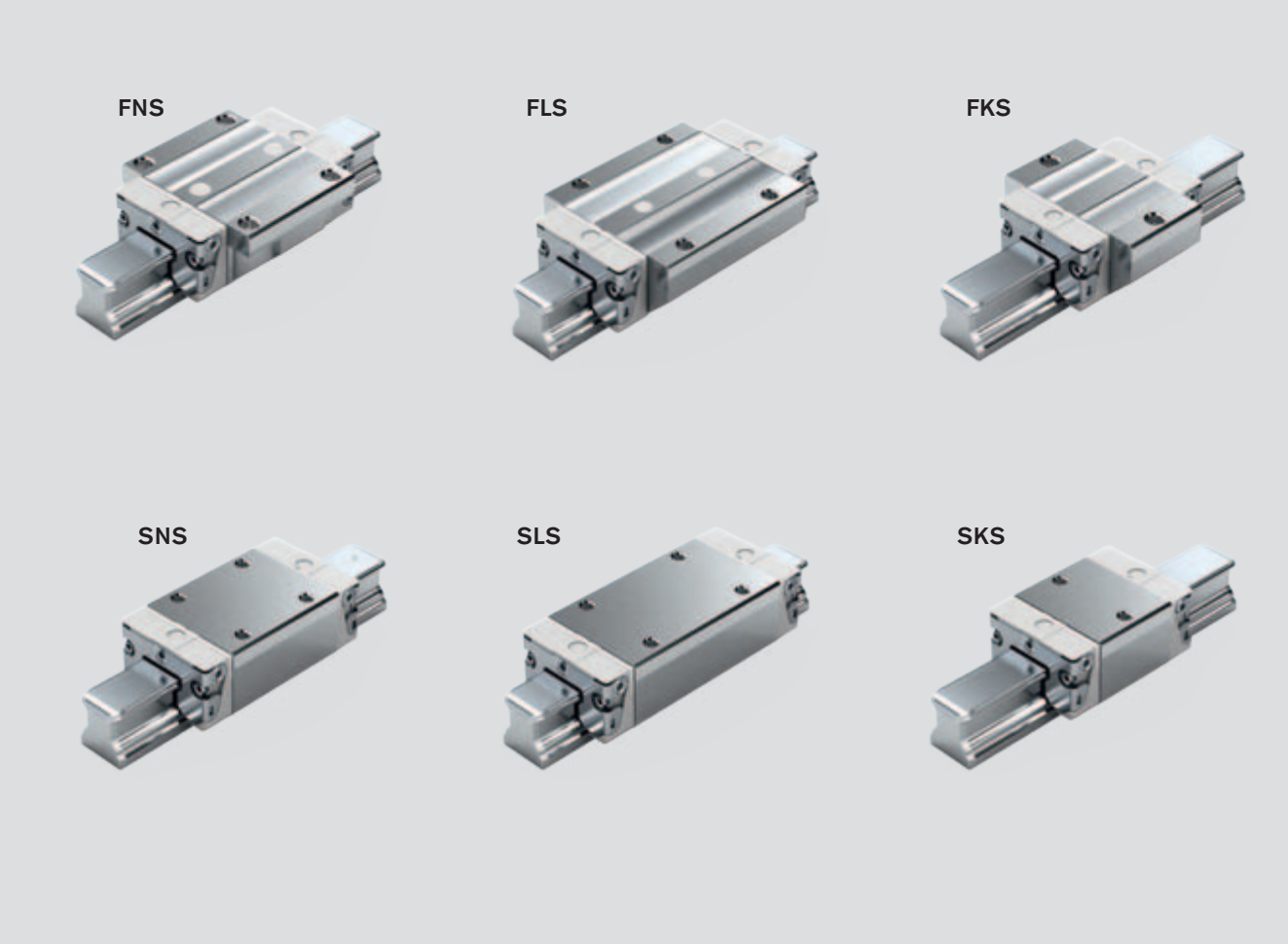


| Definition Ball Runner Block design style | | Code (example) | | |
|---|---|---|---|---|
| | | F | N | S |
| Width | Flanged | F | | |
| | Slimline | | | |
| | Wide | | | |
| | Compact | | | |
| Length | Normal | | N | |
| | Long | | | |
| | Short | | | |
| Height | Standard height | | | S |
| | High | | | |
| | Low | | | |

Standard Ball Runner Blocks NRFG

# FNS – Flanged, normal, standard height

**R2001 ... 14**

**Dynamic characteristics**
Travel speed: $v_{max} = 5$ m/s
Acceleration: $a_{max} = 500$ m/s$^2$
(If $F_{comb} > 2.8 \cdot F_{pr}$ : $a_{max} = 50$ m/s$^2$)

**Note on lubrication**
- Not pre-lubricated
- No preservative oil

**Note**
Can be used on all Ball Guide Rails SNS.

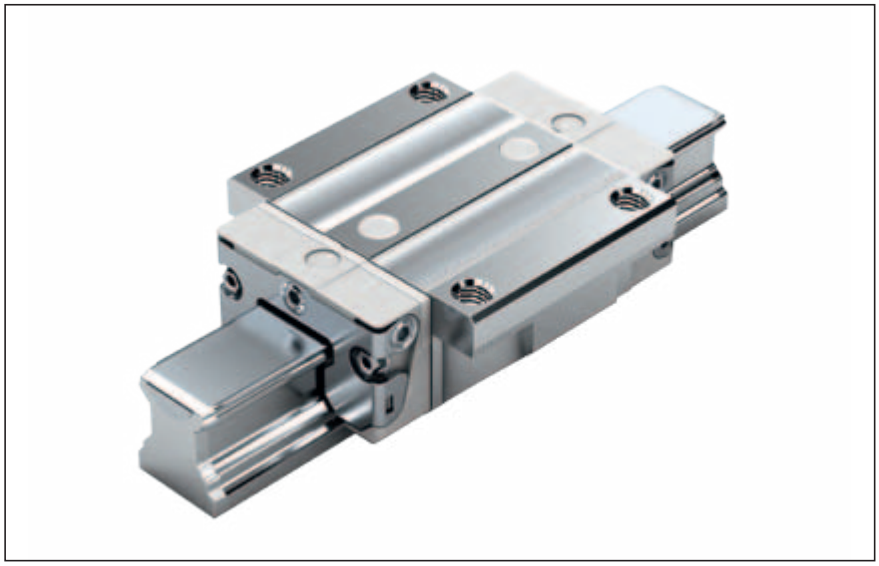

**Options and part numbers**

| Size | Ball runner block with size | Preload class C0 | C1 | C2 | Accuracy class H | Seal for ball runner block without ball chain SS |
|---|---|---|---|---|---|---|
| **15** | R2001 1 | 9 | 1 | 2 | 3 | 14 |
| **20** | R2001 8 | 9 | 1 | 2 | 3 | 14 |
| **25** | R2001 2 | 9 | 1 | 2 | 3 | 14 |
| **30** | R2001 7 | 9 | 1 | 2 | 3 | 14 |
| **35** | R2001 3 | 9 | 1 | 2 | 3 | 14 |
| **e.g.** | R2001 7 | | 1 | | 3 | 14 |

**Ordering example**
Options:
- Ball Runner Block NRFG, FNS
- Size 30
- Preload class C1
- Accuracy class H
- With standard seal, without ball chain

Part number: R2001 713 14

**Preload classes**
C0 = without preload
C1 = preload 2% C
C2 = preload 8% C

**Seals**
SS = standard seal

## Ball Runner Blocks FNS

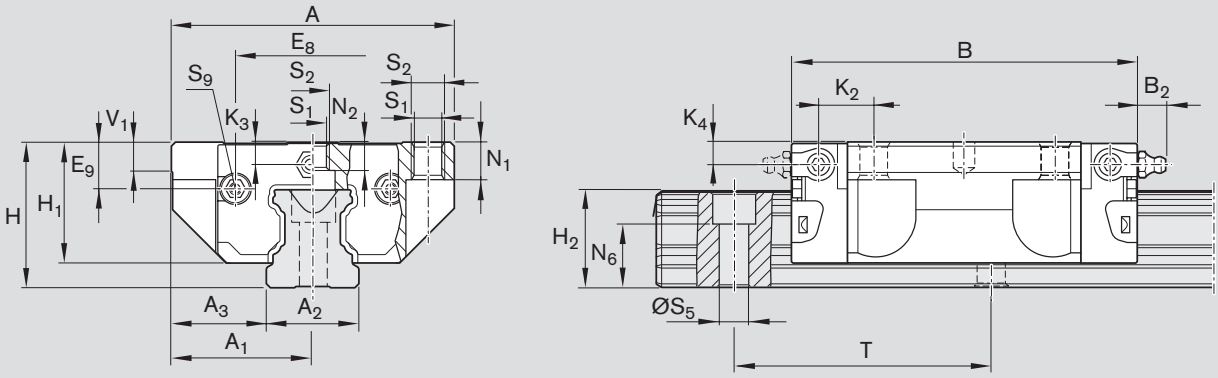


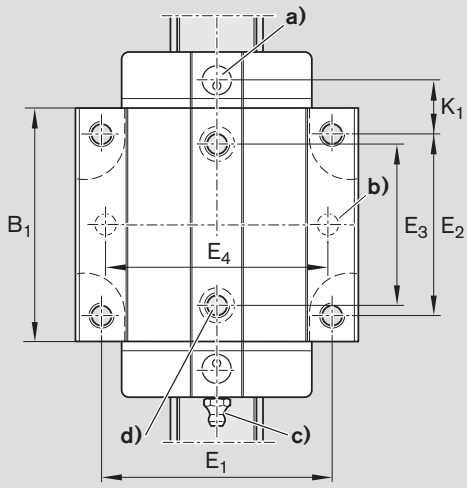


For O-ring
Size 15: Ø 4 · 1.0 (mm)
Size 20 - 35: Ø 5 · 1.0 (mm)
Open lube bore as required (☞ R310..2202).

**a)** Recommended position for pin holes (dimensions $E_4$ ☞ R310..2202). Due to manufacturing reasons, there may be rough-drilled holes at the recommended positions. These may be bored open to accommodate the locating pins.

**b)** Lube nipple, size 15 - 20:
Funnel-type lube nipple DIN 3405-A M3x5, $B_2$ = 1.6 mm
If another lube nipple is used: observe the screw-in depth of 5 mm!
Lube nipple, size 25 - 35:
Hydraulic-type lube nipple DIN 71412-A M6x8, $B_2$ = 9.5 mm
If another lube nipple is used: observe the screw-in depth of 8 mm!
Lube nipples are provided (unmounted).
Connection possible at all sides.

**c)** For manufacturing reasons, there may be plugs at these positions. These must be removed before mounting.

| Size | Dimensions (mm) | | | | | | | | | | | | | | | | | | |
|---|---|---|---|---|---|---|---|---|---|---|---|---|---|---|---|---|---|---|---|
| | A | $A_1$ | $A_2$ | $A_3$ | B | $B_1$ | $E_1$ | $E_2$ | $E_3$ | $E_8$ | $E_9$ | H | $H_1$ | $H_2$ 1) | $H_2$ 2) | $K_1$ | $K_2$ | $K_3$ | $K_4$ |
| **15** | 47 | 23.5 | 15 | 16.0 | 58.2 | 39.2 | 38 | 30 | 26 | 24.55 | 6.70 | 24 | 19.90 | 16.30 | 16.20 | 8.00 | 9.6 | 3.20 | 3.20 |
| **20** | 63 | 31.5 | 20 | 21.5 | 75.0 | 49.6 | 53 | 40 | 35 | 32.50 | 7.30 | 30 | 25.35 | 20.75 | 20.55 | 11.80 | 11.8 | 3.35 | 3.35 |
| **25** | 70 | 35.0 | 23 | 23.5 | 86.2 | 57.8 | 57 | 45 | 40 | 38.30 | 11.50 | 36 | 29.90 | 24.45 | 24.25 | 12.45 | 13.6 | 5.50 | 5.50 |
| **30** | 90 | 45.0 | 28 | 31.0 | 97.7 | 67.4 | 72 | 52 | 44 | 48.40 | 14.60 | 42 | 35.35 | 28.55 | 28.35 | 14.00 | 15.7 | 6.05 | 6.05 |
| **35** | 100 | 50.0 | 34 | 33.0 | 110.5 | 77.0 | 82 | 62 | 52 | 58.00 | 17.35 | 48 | 40.40 | 32.15 | 31.85 | 14.50 | 16.0 | 6.90 | 6.90 |

| Size | Dimensions (mm) | | | | | | | | | Weight (kg) | Load capacities 3 (N) | | Load moments 3) (Nm) | | | |
|---|---|---|---|---|---|---|---|---|---|---|---|---|---|---|---|---|
| | $N_1$ | $N_2$ | $N_6^{\pm 0.5}$ | $S_1$ | $S_2$ | $S_5$ | $S_9$ | T | $V_1$ | | C | $C_0$ | $M_t$ | $M_{t0}$ | $M_L$ | $M_{L0}$ |
| **15** | 5.2 | 4.40 | 10.3 | 4.3 | M5 | 4.5 | M2.5x3.5 | 60 | 5.0 | 0.20 | 5 100 | 9 300 | 63 | 90 | 34 | 49 |
| **20** | 7.7 | 5.20 | 13.2 | 5.3 | M6 | 6.0 | M3x5 | 60 | 6.0 | 0.45 | 12 300 | 16 900 | 205 | 215 | 110 | 115 |
| **25** | 9.3 | 7.00 | 15.2 | 6.7 | M8 | 7.0 | M3x5 | 60 | 7.5 | 0.65 | 15 000 | 21 000 | 270 | 295 | 150 | 165 |
| **30** | 11.0 | 7.90 | 17.0 | 8.5 | M10 | 9.0 | M3x5 | 80 | 7.0 | 1.10 | 20 800 | 28 700 | 460 | 500 | 245 | 265 |
| **35** | 12.0 | 10.15 | 20.5 | 8.5 | M10 | 9.0 | M3x5 | 80 | 8.0 | 1.60 | 27 600 | 37 500 | 760 | 805 | 375 | 390 |

1) Dimension $H_2$ with cover strip
2) Dimension $H_2$ without cover strip
3) Load capacities and moments for Ball Runner Block **without** ball chain.
Determination of the dynamic load capacities and moments is based on a travel life of 100,000 m per ISO 14728-1. Often only 50,000 m are actually stipulated. For comparison: Multiply values **C**, $\mathbf{M_t}$ and $\mathbf{M_L}$ from the table by 1.26.

Standard Ball Runner Blocks NRFG

# FLS – Flanged, long, standard height

**R2002 ... 14**

**Dynamic characteristics**
Travel speed: $v_{max} = 5$ m/s
Acceleration: $a_{max} = 500$ m/s$^2$
(If $F_{comb} > 2.8 \cdot F_{pr}$ : $a_{max} = 50$ m/s$^2$)

**Note on lubrication**
- Not pre-lubricated
- No preservative oil

**Note**
Can be used on all Ball Guide Rails SNS.

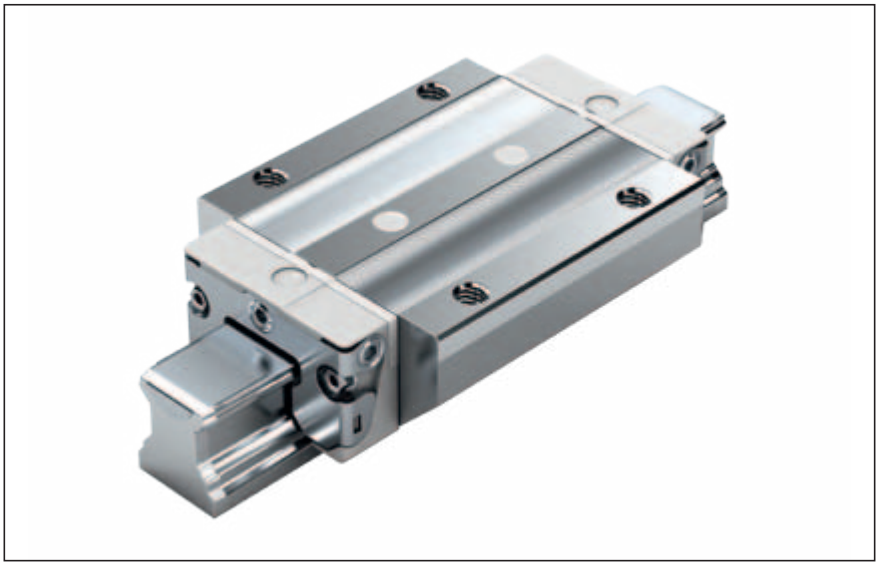

**Options and part numbers**

| Size | Ball runner block with size | Preload class C0 | C1 | C2 | Accuracy class H | Seal for ball runner block without ball chain SS |
|---|---|---|---|---|---|---|
| **15** | R2002 1 | 9 | 1 | 2 | 3 | 14 |
| **20** | R2002 8 | 9 | 1 | 2 | 3 | 14 |
| **25** | R2002 2 | 9 | 1 | 2 | 3 | 14 |
| **30** | R2002 7 | 9 | 1 | 2 | 3 | 14 |
| **35** | R2002 3 | 9 | 1 | 2 | 3 | 14 |
| **e.g.** | R2002 7 | | 1 | | 3 | 14 |

**Ordering example**
Options:
- Ball Runner Block NRFG, FLS
- Size 30
- Preload class C1
- Accuracy class H
- With standard seal, without ball chain

Part number: R2002 713 14

**Preload classes**
C0 = without preload
C1 = preload 2% C
C2 = preload 8% C

**Seals**
SS = standard seal

## Ball Runner Blocks FLS

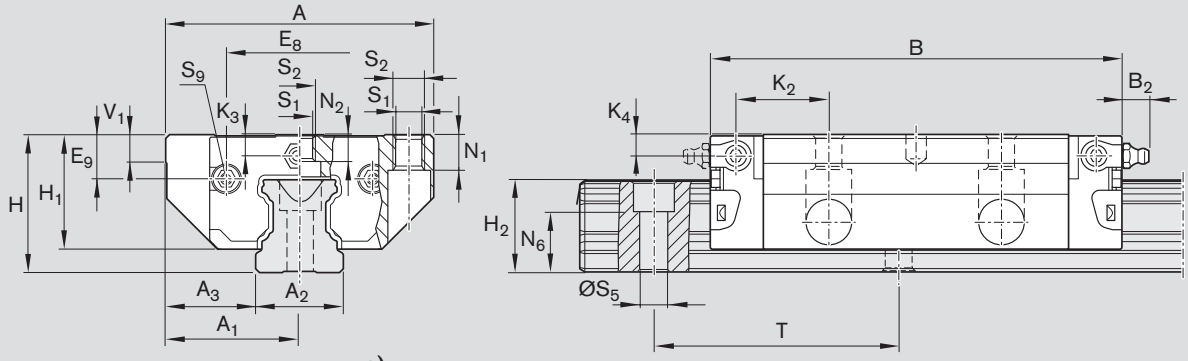


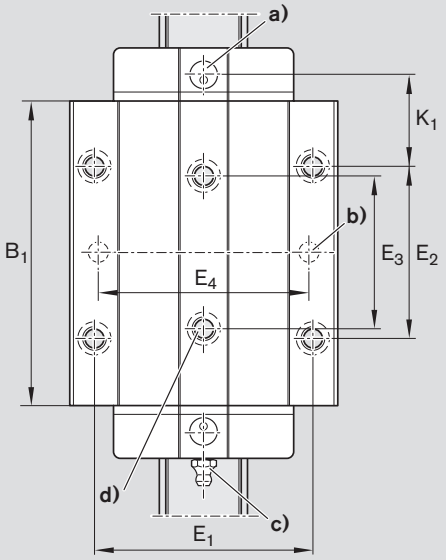


For O-ring
Size 15: Ø 4 · 1.0 (mm)
Size 20 - 35: Ø 5 · 1.0 (mm)
Open lube bore as required (☞ R310..2202).

**a)** Recommended position for pin holes (dimensions $E_4$ ☞ R310..2202). Due to manufacturing reasons, there may be rough-drilled holes at the recommended positions. These may be bored open to accommodate the locating pins.

**b)** Lube nipple, size 15 - 20:
Funnel-type lube nipple DIN 3405-A M3x5, $B_2$ = 1.6 mm
If another lube nipple is used: observe the screw-in depth of 5 mm!
Lube nipple, size 25 - 35:
Hydraulic-type lube nipple DIN 71412-A M6x8, $B_2$ = 9.5 mm
If another lube nipple is used: observe the screw-in depth of 8 mm!
Lube nipples are provided (unmounted).
Connection possible at all sides.

**c)** For manufacturing reasons, there may be plugs at these positions. These must be removed before mounting.

| Size | Dimensions (mm) | | | | | | | | | | | | | | | | | | |
|---|---|---|---|---|---|---|---|---|---|---|---|---|---|---|---|---|---|---|---|
| | A | $A_1$ | $A_2$ | $A_3$ | B | $B_1$ | $E_1$ | $E_2$ | $E_3$ | $E_8$ | $E_9$ | H | $H_1$ | $H_2$ 1) | $H_2$ 2) | $K_1$ | $K_2$ | $K_3$ | $K_4$ |
| **15** | 47 | 23.5 | 15 | 16.0 | 72.6 | 53.6 | 38 | 30 | 26 | 24.55 | 6.70 | 24 | 19.90 | 16.30 | 16.20 | 15.20 | 16.80 | 3.20 | 3.20 |
| **20** | 63 | 31.5 | 20 | 21.5 | 91.0 | 65.6 | 53 | 40 | 35 | 32.50 | 7.30 | 30 | 25.35 | 20.75 | 20.55 | 19.80 | 19.80 | 3.35 | 3.35 |
| **25** | 70 | 35.0 | 23 | 23.5 | 107.9 | 79.5 | 57 | 45 | 40 | 38.30 | 11.50 | 36 | 29.90 | 24.45 | 24.25 | 23.30 | 24.45 | 5.50 | 5.50 |
| **30** | 90 | 45.0 | 28 | 31.0 | 119.7 | 89.4 | 72 | 52 | 44 | 48.40 | 14.60 | 42 | 35.35 | 28.55 | 28.35 | 25.00 | 26.70 | 6.05 | 6.05 |
| **35** | 100 | 50.0 | 34 | 33.0 | 139.0 | 105.5 | 82 | 62 | 52 | 58.00 | 17.35 | 48 | 40.40 | 32.15 | 31.85 | 28.75 | 30.25 | 6.90 | 6.90 |

| Size | Dimensions (mm) | | | | | | | | | Weight (kg) | Load capacities 3) (N) | | Load moments 3) (Nm) | | | |
|---|---|---|---|---|---|---|---|---|---|---|---|---|---|---|---|---|
| | $N_1$ | $N_2$ | $N_6^{\pm 0.5}$ | $S_1$ | $S_2$ | $S_5$ | $S_9$ | T | $V_1$ | | C | $C_0$ | $M_t$ | $M_{t0}$ | $M_L$ | $M_{L0}$ |
| **15** | 5.2 | 4.40 | 10.3 | 4.3 | M5 | 4.5 | M2.5x3.5 | 60 | 5.0 | 0.30 | 8 500 | 14 000 | 82 | 132 | 64 | 104 |
| **20** | 7.7 | 5.20 | 13.2 | 5.3 | M6 | 6.0 | M3x5 | 60 | 6.0 | 0.55 | 16 000 | 24 400 | 265 | 310 | 190 | 230 |
| **25** | 9.3 | 7.00 | 15.2 | 6.7 | M8 | 7.0 | M3x5 | 60 | 7.5 | 0.90 | 20 000 | 31 600 | 365 | 450 | 290 | 350 |
| **30** | 11.0 | 7.90 | 17.0 | 8.5 | M10 | 9.0 | M3x5 | 80 | 7.0 | 1.50 | 26 300 | 40 100 | 590 | 695 | 420 | 495 |
| **35** | 12.0 | 10.15 | 20.5 | 8.5 | M10 | 9.0 | M3x5 | 80 | 8.0 | 2.25 | 36 500 | 56 200 | 1 025 | 1 210 | 710 | 840 |

1) Dimension $H_2$ with cover strip
2) Dimension $H_2$ without cover strip
3) Load capacities and moments for Ball Runner Block **without** ball chain.
Determination of the dynamic load capacities and moments is based on a travel life of 100,000 m per ISO 14728-1. Often only 50,000 m are actually stipulated. For comparison: Multiply values **C**, $\mathbf{M_t}$ and $\mathbf{M_L}$ from the table by 1.26.

Standard Ball Runner Blocks NRFG

# FKS – Flanged, short, standard height

**R2000 ... 14**

**Dynamic characteristics**
Travel speed: $v_{max} = 5$ m/s
Acceleration: $a_{max} = 500$ m/s$^2$
(If $F_{comb} > 2.8 \cdot F_{pr}$ : $a_{max} = 50$ m/s$^2$)

**Note on lubrication**
- Not pre-lubricated
- No preservative oil

**Note**
Can be used on all Ball Guide Rails SNS.

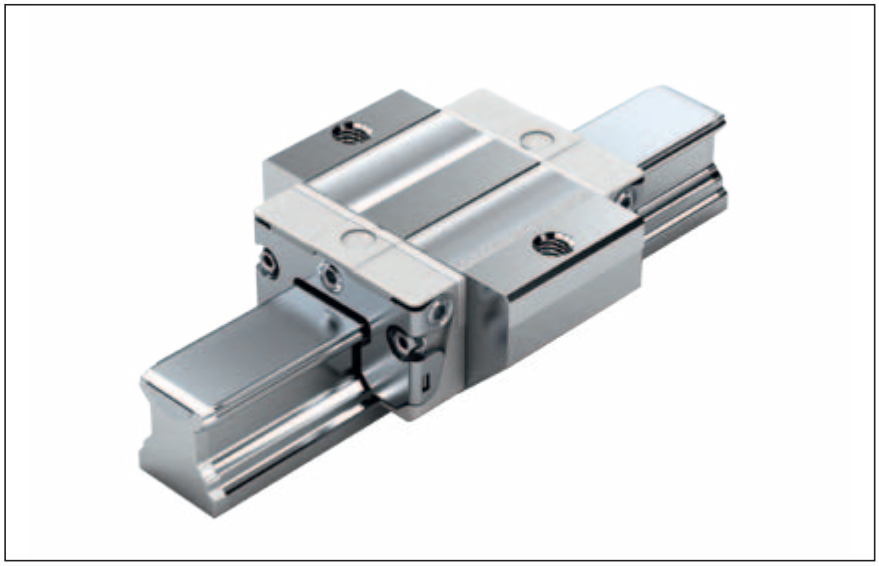

**Options and part numbers**

| Size | Ball runner block with size | Preload class C0 | Preload class C1 | Accuracy class H | Seal for ball runner block without ball chain SS |
|---|---|---|---|---|---|
| **15** | R2000 1 | 9 | 1 | 3 | 14 |
| **20** | R2000 8 | 9 | 1 | 3 | 14 |
| **25** | R2000 2 | 9 | 1 | 3 | 14 |
| **30** | R2000 7 | 9 | 1 | 3 | 14 |
| **35** | R2000 3 | 9 | 1 | 3 | 14 |
| **e.g.** | R2000 7 | | 1 | 3 | 14 |

**Ordering example**
Options:
- Ball Runner Block NRFG, FKS
- Size 30
- Preload class C1
- Accuracy class H
- With standard seal, without ball chain

Part number: R2000 713 14

**Preload classes**
C0 = without preload
C1 = preload 2% C

**Seals**
SS = standard seal

## Ball Runner Blocks FKS

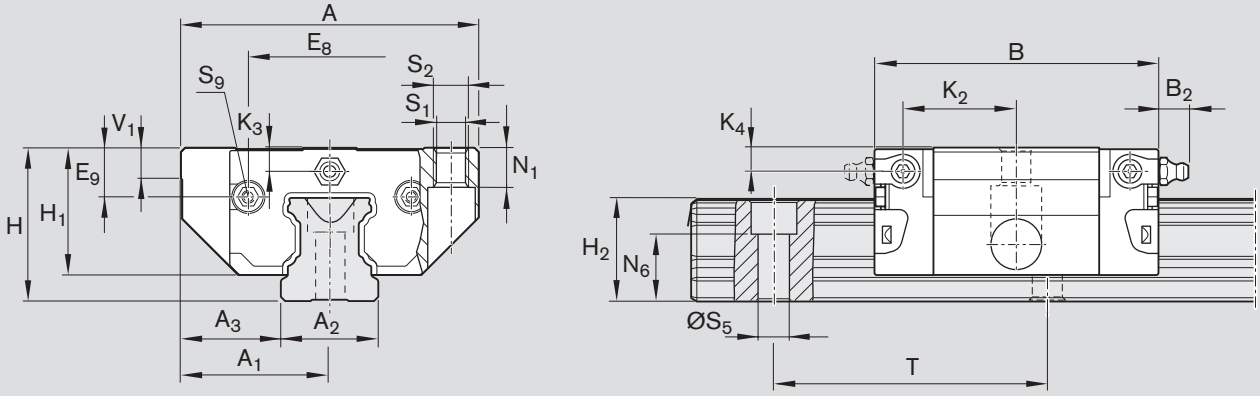


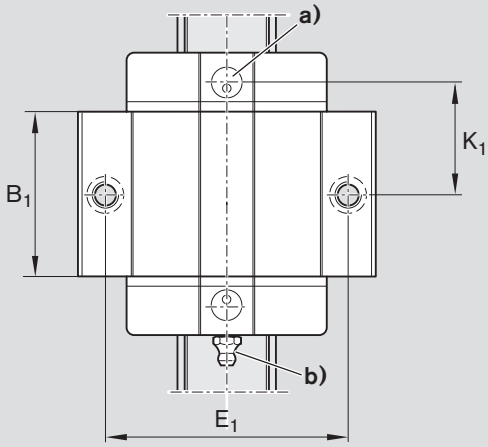


For O-ring
Size 15: Ø 4 · 1.0 (mm)
Size 20 - 35: Ø 5 · 1.0 (mm)
Open lube bore as required (☞ R310..2202).

**a)** Lube nipple, size 15 - 20:
Funnel-type lube nipple DIN 3405-A M3x5, $B_2$ = 1.6 mm
If another lube nipple is used: observe the screw-in depth of 5 mm!
Lube nipple, size 25 - 35:
Hydraulic-type lube nipple DIN 71412-A M6x8, $B_2$ = 9.5 mm
If another lube nipple is used: observe the screw-in depth of 8 mm!
Lube nipples are provided (unmounted).
Connection possible at all sides.

| Size | Dimensions (mm) | | | | | | | | | | | | | | | | |
|---|---|---|---|---|---|---|---|---|---|---|---|---|---|---|---|---|---|
| | A | $A_1$ | $A_2$ | $A_3$ | B | $B_1$ | $E_1$ | $E_8$ | $E_9$ | H | $H_1$ | $H_2$ 1) | $H_2$ 2) | $K_1$ | $K_2$ | $K_3$ | $K_4$ |
| **15** | 47 | 23.5 | 15 | 16.0 | 44.7 | 25.7 | 38 | 24.55 | 6.70 | 24 | 19.90 | 16.30 | 16.20 | 16.25 | 17.85 | 3.20 | 3.20 |
| **20** | 63 | 31.5 | 20 | 21.5 | 57.3 | 31.9 | 53 | 32.50 | 7.30 | 30 | 25.35 | 20.75 | 20.55 | 22.95 | 22.95 | 3.35 | 3.35 |
| **25** | 70 | 35.0 | 23 | 23.5 | 67.0 | 38.6 | 57 | 38.30 | 11.50 | 36 | 29.90 | 24.45 | 24.25 | 25.35 | 26.50 | 5.50 | 5.50 |
| **30** | 90 | 45.0 | 28 | 31.0 | 75.3 | 45.0 | 72 | 48.40 | 14.60 | 42 | 35.35 | 28.55 | 28.35 | 28.80 | 30.50 | 6.05 | 6.05 |
| **35** | 100 | 50.0 | 34 | 33.0 | 84.9 | 51.4 | 82 | 58.00 | 17.35 | 48 | 40.40 | 32.15 | 31.85 | 32.70 | 34.20 | 6.90 | 6.90 |

| Size | Dimensions (mm) | | | | | | | | Weight (kg) | Load capacities 3) (N) | | Load moments 3) (Nm) | | | |
|---|---|---|---|---|---|---|---|---|---|---|---|---|---|---|---|
| | $N_1$ | $N_6^{\pm 0.5}$ | $S_1$ | $S_2$ | $S_5$ | $S_9$ | T | $V_1$ | | C | $C_0$ | $M_t$ | $M_{t0}$ | $M_L$ | $M_{L0}$ |
| **15** | 5.2 | 10.3 | 4.3 | M5 | 4.5 | M2.5x3.5 | 60 | 5.0 | 0.15 | 4 500 | 5 600 | 44 | 55 | 16 | 19 |
| **20** | 7.7 | 13.2 | 5.3 | M6 | 6.0 | M3x5 | 60 | 6.0 | 0.30 | 8 200 | 9 400 | 125 | 115 | 45 | 40 |
| **25** | 9.3 | 15.2 | 6.7 | M8 | 7.0 | M3x5 | 60 | 7.5 | 0.50 | 10 500 | 12 600 | 195 | 180 | 70 | 65 |
| **30** | 11.0 | 17.0 | 8.5 | M10 | 9.0 | M3x5 | 80 | 7.0 | 0.80 | 14 500 | 17 200 | 320 | 295 | 110 | 105 |
| **35** | 12.0 | 20.5 | 8.5 | M10 | 9.0 | M3x5 | 80 | 8.0 | 1.20 | 19 300 | 22 400 | 545 | 485 | 170 | 150 |

1) Dimension $H_2$ with cover strip
2) Dimension $H_2$ without cover strip
3) Load capacities and moments for Ball Runner Block **without** ball chain.
Determination of the dynamic load capacities and moments is based on a travel life of 100,000 m per ISO 14728-1. Often only 50,000 m are actually stipulated. For comparison: Multiply values **C**, $\mathbf{M_t}$ and $\mathbf{M_L}$ from the table by 1.26.

Standard Ball Runner Blocks NRFG

# SNS – Slimline, normal, standard height

**R2011 … 14**

**Dynamic characteristics**
Travel speed: $v_{max} = 5$ m/s
Acceleration: $a_{max} = 500$ m/s$^2$
(If $F_{comb} > 2.8 \cdot F_{pr}$ : $a_{max} = 50$ m/s$^2$)

**Note on lubrication**
- Not pre-lubricated
- No preservative oil

**Note**
Can be used on all Ball Guide Rails SNS.

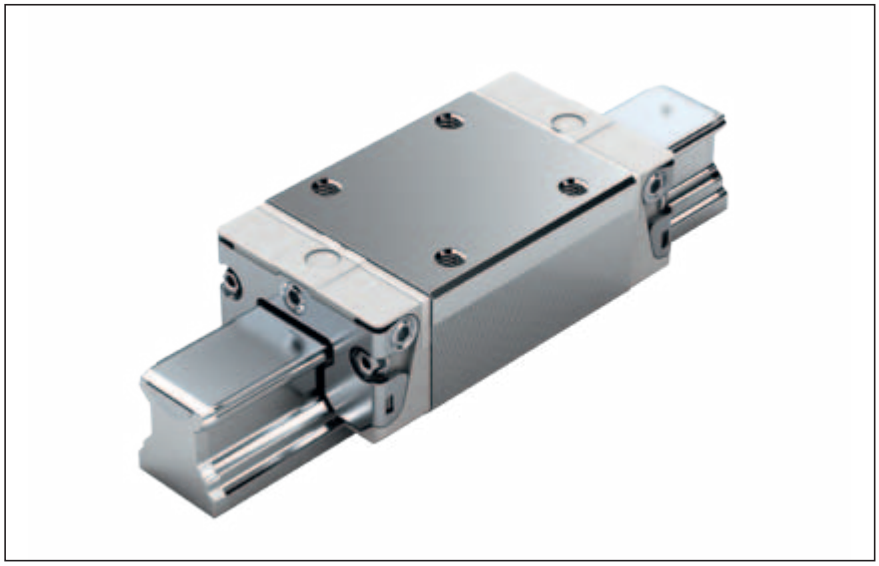

**Ordering example**
Options:
- Ball Runner Block NRFG, SNS
- Size 30
- Preload class C1
- Accuracy class H
- With standard seal, without ball chain

Part number: R2011 713 14

**Options and part numbers**

| Size | Ball runner block with size | Preload class C0 | C1 | C2 | Accuracy class H | Seal for ball runner block without ball chain SS |
|---|---|---|---|---|---|---|
| **15** | R2011 1 | 9 | 1 | 2 | 3 | 14 |
| **20** | R2011 8 | 9 | 1 | 2 | 3 | 14 |
| **25** | R2011 2 | 9 | 1 | 2 | 3 | 14 |
| **30** | R2011 7 | 9 | 1 | 2 | 3 | 14 |
| **35** | R2011 3 | 9 | 1 | 2 | 3 | 14 |
| **e.g.** | R2011 7 | | 1 | | 3 | 14 |

**Preload classes**
C0 = without preload
C1 = preload 2% C
C2 = preload 8% C

**Seals**
SS = standard seal

## Ball Runner Blocks SNS

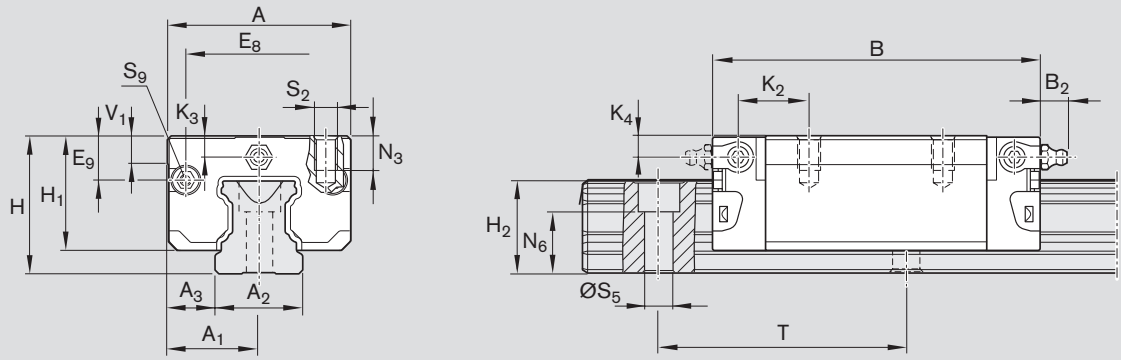


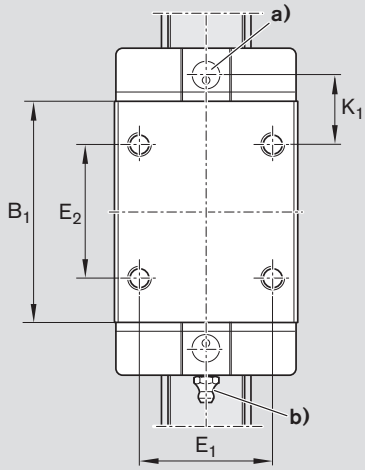


For O-ring
Size 15: Ø 4 · 1.0 (mm)
Size 20 - 35: Ø 5 · 1.0 (mm)
Open lube bore as required (☞ R310..2202).

**a)** Lube nipple, size 15 - 20:
Funnel-type lube nipple DIN 3405-A M3x5, $B_2$ = 1.6 mm
If another lube nipple is used: observe the screw-in depth of 5 mm!
Lube nipple, size 25 - 35:
Hydraulic-type lube nipple DIN 71412-A M6x8, $B_2$ = 9.5 mm
If another lube nipple is used: observe the screw-in depth of 8 mm!
Lube nipples are provided (unmounted).
Connection possible at all sides.

| Size | Dimensions (mm) | | | | | | | | | | | | | | | | | |
|---|---|---|---|---|---|---|---|---|---|---|---|---|---|---|---|---|---|---|
| | A | $A_1$ | $A_2$ | $A_3$ | B | $B_1$ | $E_1$ | $E_2$ | $E_8$ | $E_9$ | H | $H_1$ | $H_2$ 1) | $H_2$ 2) | $K_1$ | $K_2$ | $K_3$ | $K_4$ |
| **15** | 34 | 17 | 15 | 9.5 | 58.2 | 39.2 | 26 | 26 | 24.55 | 6.70 | 24 | 19.90 | 16.30 | 16.20 | 10.00 | 11.60 | 3.20 | 3.20 |
| **20** | 44 | 22 | 20 | 12.0 | 75.0 | 49.6 | 32 | 36 | 32.50 | 7.30 | 30 | 25.35 | 20.75 | 20.55 | 13.80 | 13.80 | 3.35 | 3.35 |
| **25** | 48 | 24 | 23 | 12.5 | 86.2 | 57.8 | 35 | 35 | 38.30 | 11.50 | 36 | 29.90 | 24.45 | 24.25 | 17.45 | 18.60 | 5.50 | 5.50 |
| **30** | 60 | 30 | 28 | 16.0 | 97.7 | 67.4 | 40 | 40 | 48.40 | 14.60 | 42 | 35.35 | 28.55 | 28.35 | 20.00 | 21.70 | 6.05 | 6.05 |
| **35** | 70 | 35 | 34 | 18.0 | 110.5 | 77.0 | 50 | 50 | 58.00 | 17.35 | 48 | 40.40 | 32.15 | 31.85 | 20.50 | 22.00 | 6.90 | 6.90 |

| Size | Dimensions (mm) | | | | | | | Weight (kg) | Load capacities 3) (N) | | Load moments 3) (Nm) | | | |
|---|---|---|---|---|---|---|---|---|---|---|---|---|---|---|
| | $N_3$ | $N_6^{\pm 0.5}$ | $S_2$ | $S_5$ | $S_9$ | T | $V_1$ | | C | $C_0$ | $M_t$ | $M_{t0}$ | $M_L$ | $M_{L0}$ |
| **15** | 6.0 | 10.3 | M4 | 4.5 | M2.5x3.5 | 60 | 5.0 | 0.15 | 5 100 | 9 300 | 63 | 90 | 34 | 49 |
| **20** | 7.5 | 13.2 | M5 | 6.0 | M3x5 | 60 | 6.0 | 0.35 | 12 300 | 16 900 | 205 | 215 | 110 | 115 |
| **25** | 9.0 | 15.2 | M6 | 7.0 | M3x5 | 60 | 7.5 | 0.50 | 15 000 | 21 000 | 270 | 295 | 150 | 165 |
| **30** | 12.0 | 17.0 | M8 | 9.0 | M3x5 | 80 | 7.0 | 0.85 | 20 800 | 28 700 | 460 | 500 | 245 | 265 |
| **35** | 13.0 | 20.5 | M8 | 9.0 | M3x5 | 80 | 8.0 | 1.25 | 27 600 | 37 500 | 760 | 805 | 375 | 390 |

1) Dimension $H_2$ with cover strip
2) Dimension $H_2$ without cover strip
3) Load capacities and moments for Ball Runner Block **without** ball chain.
Determination of the dynamic load capacities and moments is based on a travel life of 100,000 m per ISO 14728-1. Often only 50,000 m are actually stipulated. For comparison: Multiply values **C**, $\mathbf{M_t}$ and $\mathbf{M_L}$ from the table by 1.26.

Standard Ball Runner Blocks NRFG

# SLS – Slimline, long, standard height

**R2012 ... 14**

**Dynamic characteristics**
Travel speed: $v_{max} = 5$ m/s
Acceleration: $a_{max} = 500$ m/s$^2$
(If $F_{comb} > 2.8 \cdot F_{pr}$ : $a_{max} = 50$ m/s$^2$)

**Note on lubrication**
- Not pre-lubricated
- No preservative oil

**Note**
Can be used on all Ball Guide Rails SNS.

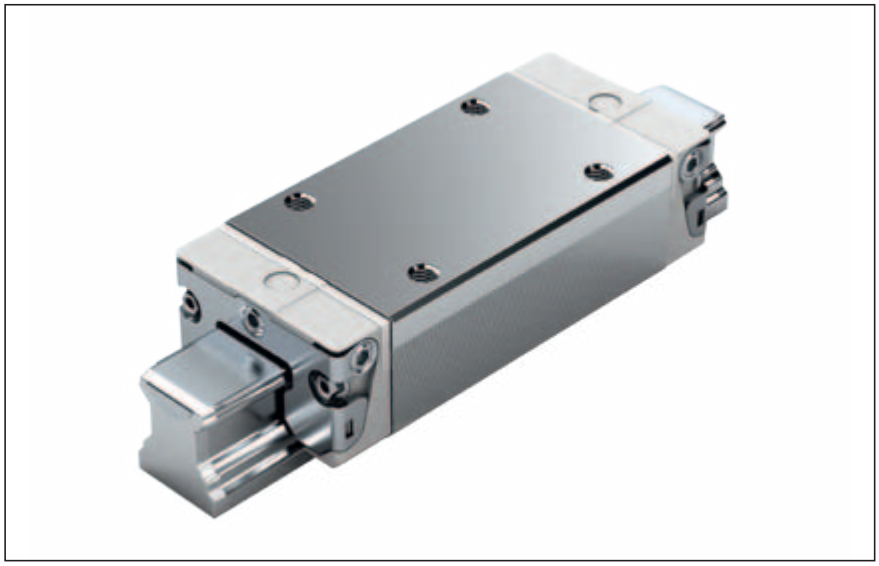

**Ordering example**
Options:
- Ball Runner Block NR, SNS
- Size 30
- Preload class C1
- Accuracy class H
- With standard seal, without ball chain

Part number: R2012 713 14

**Options and part numbers**

| Size | Ball runner block with size | Preload class C0 | C1 | C2 | Accuracy class H | Seal for ball runner block without ball chain SS |
|---|---|---|---|---|---|---|
| **15** | R2012 1 | 9 | 1 | 2 | 3 | 14 |
| **20** | R2012 8 | 9 | 1 | 2 | 3 | 14 |
| **25** | R2012 2 | 9 | 1 | 2 | 3 | 14 |
| **30** | R2012 7 | 9 | 1 | 2 | 3 | 14 |
| **35** | R2012 3 | 9 | 1 | 2 | 3 | 14 |
| **e.g.** | R2012 7 | | 1 | | 3 | 14 |

**Preload classes**
C0 = without preload
C1 = preload 2% C
C2 = preload 8% C

**Seals**
SS = standard seal

## Ball Runner Blocks SLS

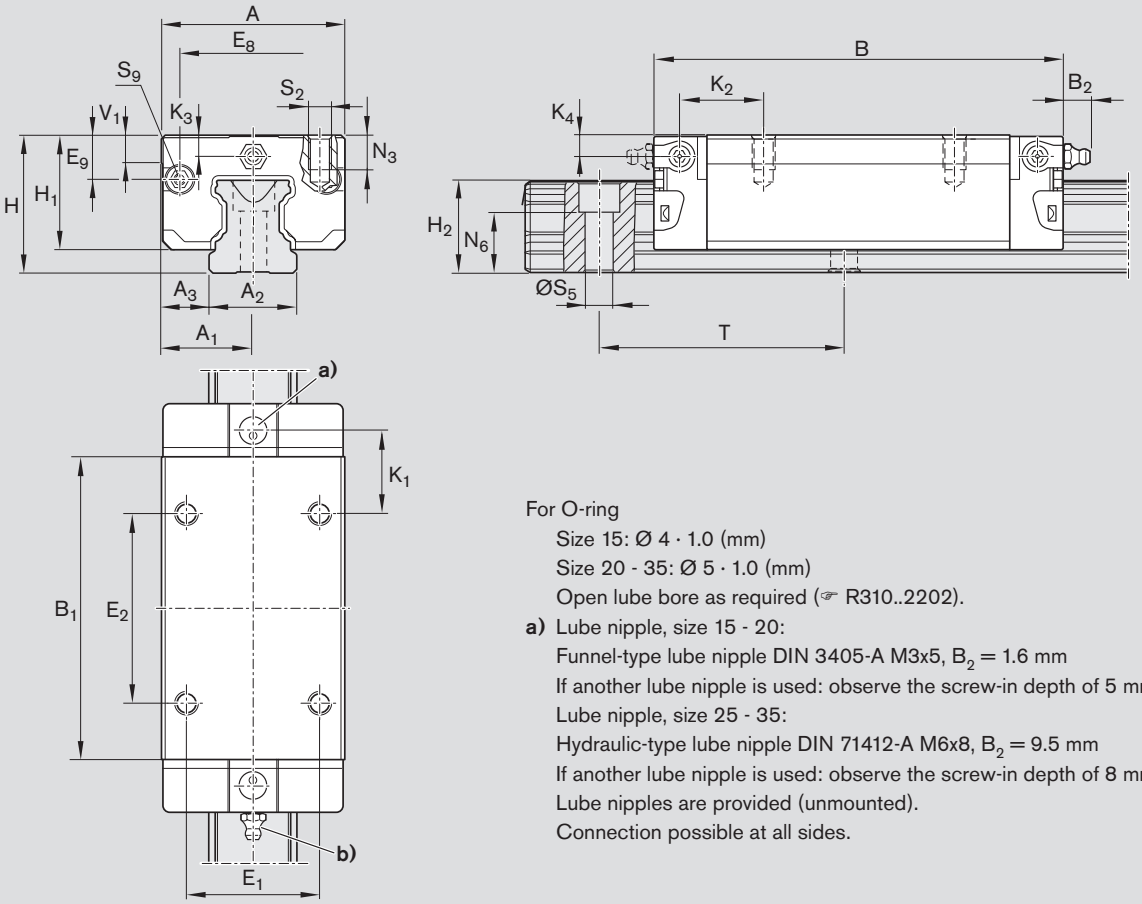


For O-ring
Size 15: Ø 4 · 1.0 (mm)
Size 20 - 35: Ø 5 · 1.0 (mm)
Open lube bore as required (☞ R310..2202).

**a)** Lube nipple, size 15 - 20:
Funnel-type lube nipple DIN 3405-A M3x5, $B_2$ = 1.6 mm
If another lube nipple is used: observe the screw-in depth of 5 mm!
Lube nipple, size 25 - 35:
Hydraulic-type lube nipple DIN 71412-A M6x8, $B_2$ = 9.5 mm
If another lube nipple is used: observe the screw-in depth of 8 mm!
Lube nipples are provided (unmounted).
Connection possible at all sides.

| Size | Dimensions (mm) | | | | | | | | | | | | | | | | | |
|---|---|---|---|---|---|---|---|---|---|---|---|---|---|---|---|---|---|---|
| | A | $A_1$ | $A_2$ | $A_3$ | B | $B_1$ | $E_1$ | $E_2$ | $E_8$ | $E_9$ | H | $H_1$ | $H_2$ 1) | $H_2$ 2) | $K_1$ | $K_2$ | $K_3$ | $K_4$ |
| **15** | 34 | 17 | 15 | 9.5 | 72.6 | 53.6 | 26 | 26 | 24.55 | 6.70 | 24 | 19.90 | 16.30 | 16.20 | 17.20 | 18.80 | 3.20 | 3.20 |
| **20** | 44 | 22 | 20 | 12.0 | 91.0 | 65.6 | 32 | 50 | 32.50 | 7.30 | 30 | 25.35 | 20.75 | 20.55 | 14.80 | 14.80 | 3.35 | 3.35 |
| **25** | 48 | 24 | 23 | 12.5 | 107.9 | 79.5 | 35 | 50 | 38.30 | 11.50 | 36 | 29.90 | 24.45 | 24.25 | 20.80 | 21.95 | 5.50 | 5.50 |
| **30** | 60 | 30 | 28 | 16.0 | 119.7 | 89.4 | 40 | 60 | 48.40 | 14.60 | 42 | 35.35 | 28.55 | 28.35 | 21.00 | 22.70 | 6.05 | 6.05 |
| **35** | 70 | 35 | 34 | 18.0 | 139.0 | 105.5 | 50 | 72 | 58.00 | 17.35 | 48 | 40.40 | 32.15 | 31.85 | 23.75 | 25.25 | 6.90 | 6.90 |

| Size | Dimensions (mm) | | | | | | | Weight (kg) | Load capacities 3) (N) | | Load moments 3) (Nm) | | | |
|---|---|---|---|---|---|---|---|---|---|---|---|---|---|---|
| | $N_3$ | $N_6^{\pm 0.5}$ | $S_2$ | $S_5$ | $S_9$ | T | $V_1$ | | C | $C_0$ | $M_t$ | $M_{t0}$ | $M_L$ | $M_{L0}$ |
| **15** | 6.0 | 10.3 | M4 | 4.5 | M2.5x3.5 | 60 | 5.0 | 0.20 | 8 500 | 14 000 | 82 | 132 | 64 | 104 |
| **20** | 7.5 | 13.2 | M5 | 6.0 | M3x5 | 60 | 6.0 | 0.45 | 16 000 | 24 400 | 265 | 310 | 190 | 230 |
| **25** | 9.0 | 15.2 | M6 | 7.0 | M3x5 | 60 | 7.5 | 0.65 | 20 000 | 31 600 | 365 | 450 | 290 | 350 |
| **30** | 12.0 | 17.0 | M8 | 9.0 | M3x5 | 80 | 7.0 | 1.10 | 26 300 | 40 100 | 590 | 695 | 420 | 495 |
| **35** | 13.0 | 20.5 | M8 | 9.0 | M3x5 | 80 | 8.0 | 1.70 | 36 500 | 56 200 | 1 025 | 1 210 | 710 | 840 |

1) Dimension $H_2$ with cover strip
2) Dimension $H_2$ without cover strip
3) Load capacities and moments for Ball Runner Block **without** ball chain.
Determination of the dynamic load capacities and moments is based on a travel life of 100,000 m per ISO 14728-1. Often only 50,000 m are actually stipulated. For comparison: Multiply values **C**, $\mathbf{M_t}$ and $\mathbf{M_L}$ from the table by 1.26.

Standard Ball Runner Blocks NRFG

# SKS – Slimline, short, standard height

**R2010 ... 14**

**Dynamic characteristics**
Travel speed: $v_{max} = 5$ m/s
Acceleration: $a_{max} = 500$ m/s$^2$
(If $F_{comb} > 2.8 \cdot F_{pr}$ : $a_{max} = 50$ m/s$^2$)

**Note on lubrication**
- Not pre-lubricated
- No preservative oil

**Note**
Can be used on all Ball Guide Rails SNS.

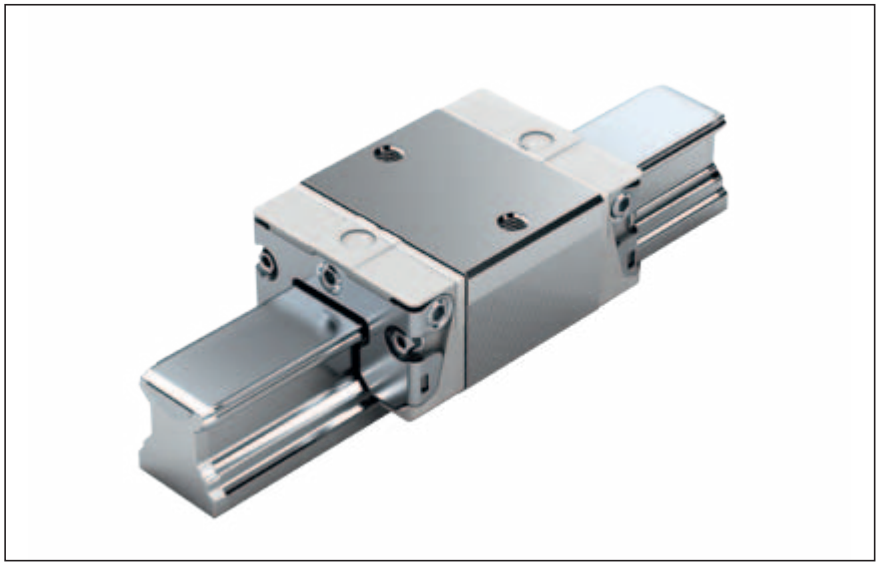

**Ordering example**
Options:
- Ball Runner Block SKS
- Size 30
- Preload class C1
- Accuracy class H
- With standard seal, without ball chain

Part number: R2010 713 14

**Options and part numbers**

| Size | Ball runner block with size | Preload class C0 | Preload class C1 | Accuracy class H | Seal for ball runner block without ball chain SS |
|---|---|---|---|---|---|
| **15** | R2010 1 | 9 | 1 | 3 | 14 |
| **20** | R2010 8 | 9 | 1 | 3 | 14 |
| **25** | R2010 2 | 9 | 1 | 3 | 14 |
| **30** | R2010 7 | 9 | 1 | 3 | 14 |
| **35** | R2010 3 | 9 | 1 | 3 | 14 |
| **e.g.** | R2010 7 | | 1 | 3 | 14 |

**Preload classes**
C0 = without preload
C1 = preload 2% C

**Seals**
SS = standard seal

## Ball Runner Blocks SKS

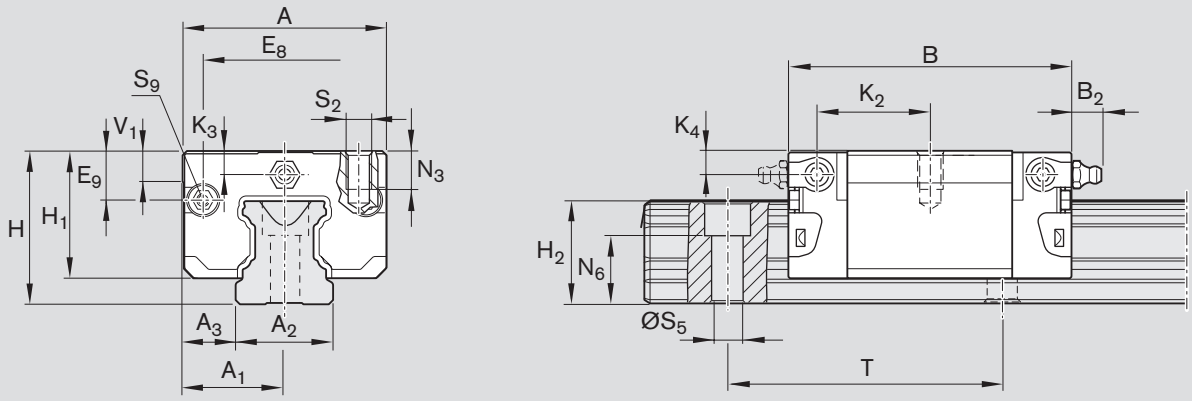


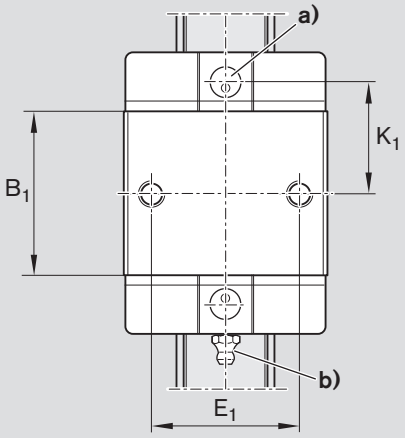


For O-ring
Size 15: Ø 4 · 1.0 (mm)
Size 20 - 35: Ø 5 · 1.0 (mm)
Open lube bore as required (☞ R310..2202).

**a)** Lube nipple, size 15 - 20:
Funnel-type lube nipple DIN 3405-A M3x5, $B_2$ = 1.6 mm
If another lube nipple is used: observe the screw-in depth of 5 mm!
Lube nipple, size 25 - 35:
Hydraulic-type lube nipple DIN 71412-A M6x8, $B_2$ = 9.5 mm
If another lube nipple is used: observe the screw-in depth of 8 mm!
Lube nipples are provided (unmounted).
Connection possible at all sides.

| Size | Dimensions (mm) | | | | | | | | | | | | | | | | |
|---|---|---|---|---|---|---|---|---|---|---|---|---|---|---|---|---|---|
| | A | $A_1$ | $A_2$ | $A_3$ | B | $B_1$ | $E_1$ | $E_8$ | $E_9$ | H | $H_1$ | $H_2$ 1) | $H_2$ 2) | $K_1$ | $K_2$ | $K_3$ | $K_4$ |
| **15** | 34 | 17 | 15 | 9.5 | 44.7 | 25.7 | 26 | 24.55 | 6.70 | 24 | 19.90 | 16.30 | 16.20 | 16.25 | 17.85 | 3.20 | 3.20 |
| **20** | 44 | 22 | 20 | 12.0 | 57.3 | 31.9 | 32 | 32.50 | 7.30 | 30 | 25.35 | 20.75 | 20.55 | 22.95 | 22.95 | 3.35 | 3.35 |
| **25** | 48 | 24 | 23 | 12.5 | 67.0 | 38.6 | 35 | 38.30 | 11.50 | 36 | 29.90 | 24.45 | 24.25 | 25.35 | 26.50 | 5.50 | 5.50 |
| **30** | 60 | 30 | 28 | 16.0 | 75.3 | 45.0 | 40 | 48.40 | 14.60 | 42 | 35.35 | 28.55 | 28.35 | 28.80 | 30.50 | 6.05 | 6.05 |
| **35** | 70 | 35 | 34 | 18.0 | 84.9 | 51.4 | 50 | 58.00 | 17.35 | 48 | 40.40 | 32.15 | 31.85 | 32.70 | 34.20 | 6.90 | 6.90 |

| Size | Dimensions (mm) | | | | | | | Weight (kg) | Load capacities 3) (N) | | Load moments 3) (Nm) | | | |
|---|---|---|---|---|---|---|---|---|---|---|---|---|---|---|
| | $N_3$ | $N_6^{\pm 0.5}$ | $S_2$ | $S_5$ | $S_9$ | T | $V_1$ | | C | $C_0$ | $M_t$ | $M_{t0}$ | $M_L$ | $M_{L0}$ |
| **15** | 6.0 | 10.3 | M4 | 4.5 | M2.5x3.5 | 60 | 5.0 | 0.10 | 4 500 | 5 600 | 44 | 55 | 16 | 19 |
| **20** | 7.5 | 13.2 | M5 | 6.0 | M3x5 | 60 | 6.0 | 0.25 | 8 200 | 9 400 | 125 | 115 | 45 | 40 |
| **25** | 9.0 | 15.2 | M6 | 7.0 | M3x5 | 60 | 7.5 | 0.35 | 10 500 | 12 600 | 195 | 180 | 70 | 65 |
| **30** | 12.0 | 17.0 | M8 | 9.0 | M3x5 | 80 | 7.0 | 0.60 | 14 500 | 17 200 | 320 | 295 | 110 | 105 |
| **35** | 13.0 | 20.5 | M8 | 9.0 | M3x5 | 80 | 8.0 | 0.90 | 19 300 | 22 400 | 545 | 485 | 170 | 150 |

1) Dimension $H_2$ with cover strip
2) Dimension $H_2$ without cover strip
3) Load capacities and moments for Ball Runner Block **without** ball chain.
Determination of the dynamic load capacities and moments is based on a travel life of 100,000 m per ISO 14728-1. Often only 50,000 m are actually stipulated. For comparison: Multiply values **C**, $\mathbf{M_t}$ and $\mathbf{M_L}$ from the table by 1.26.

Ball Guide Rails, Resist NR II

# Product Description, Ball Guide Rails SNS

## Characteristic features

- Top rigidity in all load directions
- High torque load capacity

**Corrosion resistance and conditions of use**
Ball guide rails Resist NR II made of corrosion-resistant steel as per EN 10088. Ball guide rails Resist NR II are used particularly in applications involving water-based media. They are also suitable for environments with a relative humidity of over 70% and temperatures above 30°C.
Since they have built-in corrosion protection, ball guide rails Resist NR II are also ideal for use in the semiconductor industry, machine tools, and especially wherever corrosion protection is required. Other application areas include the packaging industry and areas of the food industry.
Ball guide rails with corrosion-resistant coatings can also be replaced by ball guide rails Resist NR II.
Where special conditions of use are involved, please consult us.

**Proven cover strip for ball guide rail mounting holes**
- A single cover for all holes – saves time and money
- Made of corrosion-resistant spring steel per EN 10088
- Easy, secure mounting
- Clip on and fasten

**Ball guide rails with cover strip**
- Secured with screws and washers

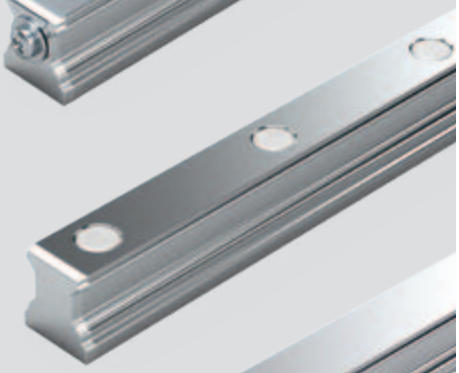

**Ball guide rails with white plastic mounting hole plugs**

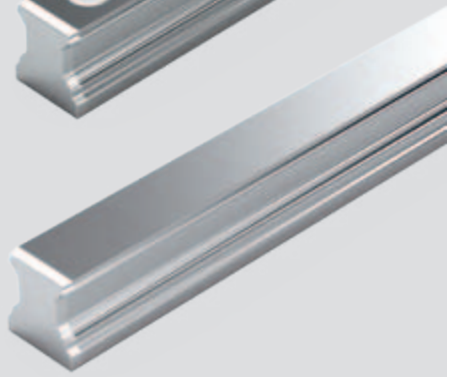

**Ball guide rails for mounting from below**

| Definition<br>Ball guide rail design style | | Code<br>(example) | | |
|---|---|---|---|---|
| | | S | N | S |
| Width | Slimline | S | | |
| | Wide | | | |
| Length | Normal | | N | |
| Height | Standard height | | | S |

# Ordering Examples

## Ordering ball guide rails in recommended lengths

The procedure shown in the following ordering examples applies to all ball guide rails. Recommended rail lengths are more cost effective.

**Options and part numbers**

| Size | Ball guide rail with size | Accuracy class | | | Number of sections ., Rail length L (mm), .... | | Hole spacing T (mm) | Recommended rail length according to formula $L = n_B \cdot T - 4$ mm |
|---|---|---|---|---|---|---|---|---|
| | | N | H | P | One-piece | Composite | | Maximum number of holes $n_B$ |
| 15 | R2045 14 | 4 | 3 | 2 | 31, .... | 3., .... | 60 | 30 |
| 20 | R2045 84 | 4 | 3 | 2 | 31, .... | 3., .... | 60 | 64 |
| 25 | R2045 24 | 4 | 3 | 2 | 31, .... | 3., .... | 60 | 64 |
| 30 | R2045 74 | 4 | 3 | 2 | 31, .... | 3., .... | 80 | 48 |
| 35 | R2045 34 | 4 | 3 | 2 | 61, .... | 6., .... | 80 | 48 |
| e.g. | R2045 74 | | 3 | | 31, 1676 | | | |

Excerpt from table with part numbers and recommended rail lengths for ordering example

### From the desired length to the recommended length

$$L = \left(\frac{L_W}{T}\right)^{*} \cdot T - 4$$

* Round up the quotient $L_W/T$ to the next whole number.

W = desired length
T = hole spacing

### Calculation example

$$L = \left(\frac{1660}{80\ \text{mm}}\right) \cdot 80\ \text{mm} - 4\ \text{mm}$$

$L = 21 \cdot 80\ \text{mm} - 4\ \text{mm}$
$L = 1676\ \text{mm}$

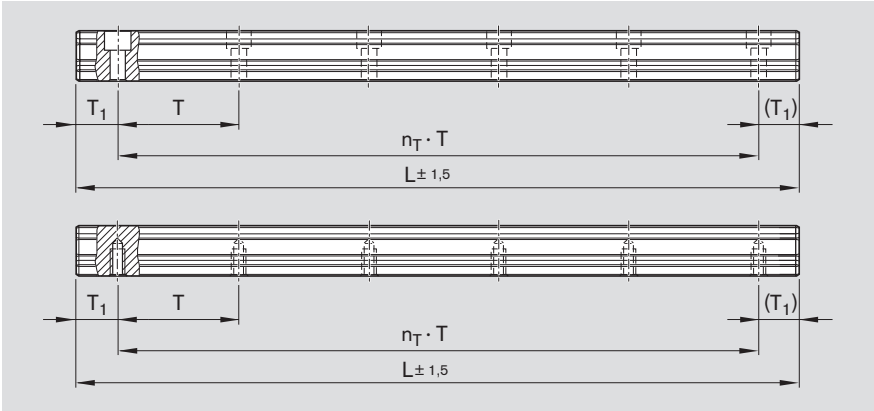


$$L = n_B \cdot T - 4\ \text{mm}$$

Basis: number of holes

$$L = n_T \cdot T + 2 \cdot T_{1S}$$

Basis: number of spaces between holes

| | | | |
|---|---|---|---|
| L | = | recommended rail length | (mm) |
| $L_W$ | = | desired rail length | (mm) |
| T | = | hole spacing[1)] | (mm) |
| $T_{1S}$ | = | preferred dimension[1)] | (mm) |
| $n_B$ | = | number of holes | (–) |
| $n_T$ | = | no. of spaces between holes | (–) |

1) For values, see dimensions table at dimension drawing.

### Notes on ordering examples

If the preferred dimension $T_{1S}$ cannot be used:
- Select an end space $T_1$ between $T_{1S}$ and $T_{1\,min}$.
- Alternatively, select an end space between $T_1$ and $T_{1max}$.

### Ordering example 1 (up to $L_{max}$)

- Ball Guide Rail NR II, SNS size 30 with cover strip
- Accuracy class H
- Calculated rail length 1676 mm, (20 · T, preferred dimension $T_{1S}$ = 38 mm; number of holes $n_B$ = 21)

**Ordering data**

Part number, rail length (mm)
$T_1$ / $n_T \cdot T$ / $T_1$ (mm)

**R2045 743 31, 1676** mm
**38 / 20 · 80 / 38** mm

### Ordering example 2 (over $L_{max}$)

- Ball Guide Rail NR II, SNS size 30 with cover strip
- Accuracy class H
- Calculated rail length 5116 mm, 2 sections (63 · T, preferred dimension $T_{1S}$ = 38 mm; number of holes $n_B$ = 64)

**Ordering data**

Part number and number of sections, rail length (mm)
$T_1$ / $n_T \cdot T$ / $T_1$ (mm)

**R2045 743 32, 5116** mm
**38 / 63 · 80 / 38** mm

For rail lengths greater than $L_{max}$, Rexroth provides matching rail sections for end to end mounting.

Ball Guide Rails, Resist NR II

# SNS with Cover Strip, Screws and Washers

**R2045 .4. ..**

**For mounting from above, with cover strip made of corrosion-resistant spring steel per EN 10088.**
**Cover strip secured with screws and washers.**

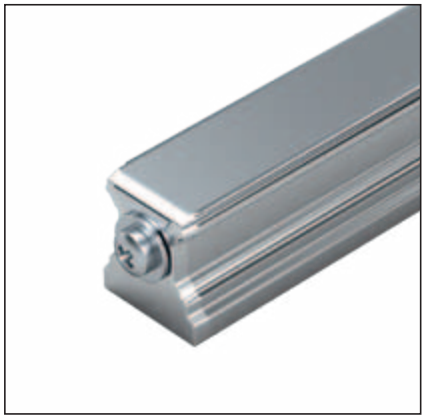

**Notes for mounting:**
- Secure the cover strip!
- Screws and washers are included in the supply scope.
- Follow the mounting instructions! Send for the publications “Mounting Instructions for Ball Rail Systems” and “Mounting Instructions for the Cover Strip.”
- Composite guide rails also available.

**Options and part numbers**

| Size | Ball guide rail with size | Accuracy class | | | Number of sections ., Rail length L (mm), .... | | Hole spacing T (mm) | Recommended rail length according to formula $L = n_B \cdot T - 4$ mm |
|---|---|---|---|---|---|---|---|---|
| | | N | H | P | One-piece | Composite | | Maximum number of holes $n_B$ |
| 15 | R2045 14 | 4 | 3 | 2 | 31, .... | 3., .... | 60 | 30 |
| 20 | R2045 84 | 4 | 3 | 2 | 31, .... | 3., .... | 60 | 64 |
| 25 | R2045 24 | 4 | 3 | 2 | 31, .... | 3., .... | 60 | 64 |
| 30 | R2045 74 | 4 | 3 | 2 | 31, .... | 3., .... | 80 | 48 |
| 35 | R2045 34 | 4 | 3 | 2 | 61, .... | 6., .... | 80 | 48 |
| e.g. | R2045 74 | | 3 | | 31, 1676 | | | |

**Ordering example 1:**
**(up to $L_{max}$)**
Options:
- Ball Guide Rail NR II, SNS
- Size 30
- Accuracy class H
- One-piece
- Rail length L = 1676 mm

Part number:
R2045 743 31, 1676 mm

**Ordering example 2:**
**(over $L_{max}$)**
Options:
- Ball Guide Rail NR II, SNS
- Size 30
- Accuracy class H
- **2 sections**
- Rail length L = 5116 mm

Part number:
R2045 743 3**2**, 5116 mm

**Ball Guide Rails SNS**

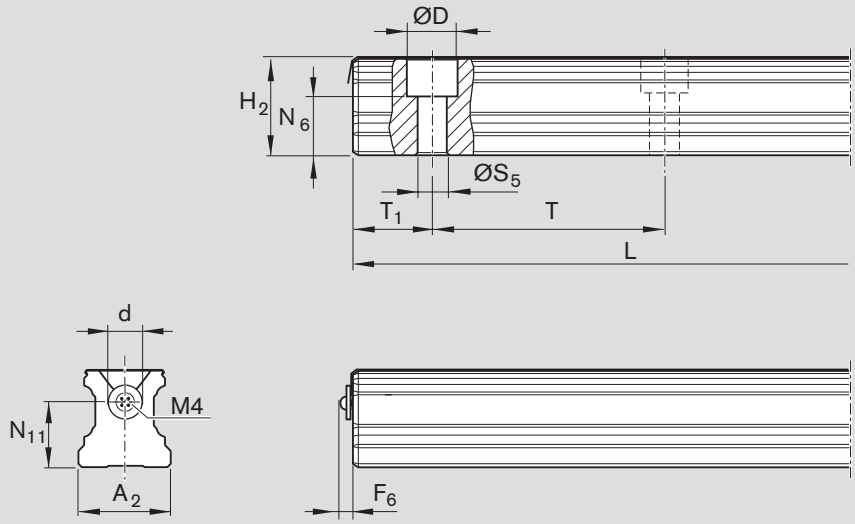


| Size | Dimensions (mm) | | | | | | | | | | | | | Weight |
|---|---|---|---|---|---|---|---|---|---|---|---|---|---|---|
| | $A_2$ | D | $F_4$ 2) | $F_5$ | $F_6$ | $H_2$ 1) | $L_{max}$ | $N_6^{\pm 0.5}$ | $S_5$ | T | $T_{1\,min}$ 3) | $T_{1S}$ 4) | $T_{1\,max}$ | (kg/m) |
| **15** | 15 | 7.4 | 7.3 | 12 | 2.0 | 16.30 | 1 856 | 10.3 | 4.5 | 60 | 12 | 28.0 | 50 | 1.4 |
| **20** | 20 | 9.4 | 7.1 | 12 | 2.0 | 20.75 | 3 836 | 13.2 | 6.0 | 60 | 13 | 28.0 | 50 | 2.4 |
| **25** | 23 | 11.0 | 8.2 | 13 | 2.0 | 24.45 | 3 836 | 15.2 | 7.0 | 60 | 13 | 28.0 | 50 | 3.2 |
| **30** | 28 | 15.0 | 8.7 | 13 | 2.0 | 28.55 | 3 836 | 17.0 | 9.0 | 80 | 16 | 38.0 | 68 | 5.0 |
| **35** | 34 | 15.0 | 11.7 | 16 | 2.2 | 32.15 | 3 836 | 20.5 | 9.0 | 80 | 16 | 38.0 | 68 | 6.8 |

## Accessories

- Cover strip (☞ R310..2202).
- Screws and washers

| Size | Screw kit (screws and washers, 2 each per ball guide rail) | |
|---|---|---|
| | **Part numbers** | **Weight** (g) |
| **15** | R1619 139 40 | 4 |
| **20** | R1619 839 40 | 5 |
| **25** | R1619 239 40 | 6 |
| **30** | R1619 339 40 | 7 |
| **35** | R1619 339 40 | 7 |

1) Dimension $H_2$ with cover strip
   Size 15 with 0.1 mm cover strip
   Size 20 - 30 with 0.2 mm cover strip
   Size 35 with 0.3 mm cover strip
2) Recommended: preferred dimension $T_{1S}$ with tolerances ± 0.75.

Ball Guide Rails, Resist NR II

# SNS with Plastic Mounting Hole Plugs

**R2045 .0. ..**

**For mounting from above,**
**with plastic mounting hole plugs**

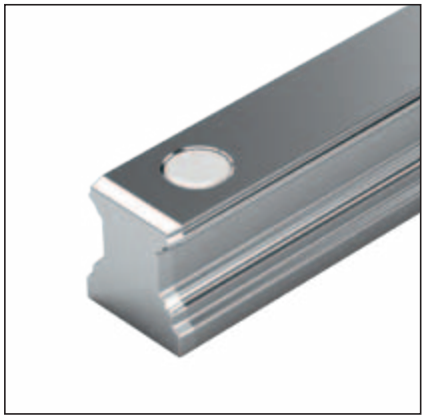

**Notes for mounting:**
- Plastic mounting hole plugs included in scope of supply.
- Follow the mounting instructions! Send for the publication “Mounting Instructions for Ball Rail Systems.”
- Composite guide rails also available.

**Options and part numbers**

| Size | Ball guide rail with size | Accuracy class | | | Number of sections ., Rail length L (mm), .... | | Hole spacing T (mm) | Recommended rail length according to formula $L = n_B \cdot T - 4$ mm |
|---|---|---|---|---|---|---|---|---|
| | | N | H | P | One-piece | Composite | | Maximum number of holes $n_B$ |
| **15** | R2045 10 | 4 | 3 | 2 | 31, .... | 3., .... | 60 | 30 |
| **20** | R2045 80 | 4 | 3 | 2 | 31, .... | 3., .... | 60 | 64 |
| **25** | R2045 20 | 4 | 3 | 2 | 31, .... | 3., .... | 60 | 64 |
| **30** | R2045 70 | 4 | 3 | 2 | 31, .... | 3., .... | 80 | 48 |
| **35** | R2045 30 | 4 | 3 | 2 | 31, .... | 3., .... | 80 | 48 |
| **e.g.** | R2045 70 | | 3 | | 31, 1676 | | | |

**Ordering example 1:**
**(up to $L_{max}$)**
Options:
- Ball Guide Rail NR II, SNS
- Size 30
- Accuracy class H
- One-piece
- Rail length L = 1676 mm

Part number:
R2045 703 31, 1676 mm

**Ordering example 2:**
**(over $L_{max}$)**
Options:
- Ball Guide Rail NR II, SNS
- Size 30
- Accuracy class H
- **2 sections**
- Rail length L = 5116 mm

Part number:
R2045 703 3**2**, 5116 mm

**Ball Guide Rails SNS**

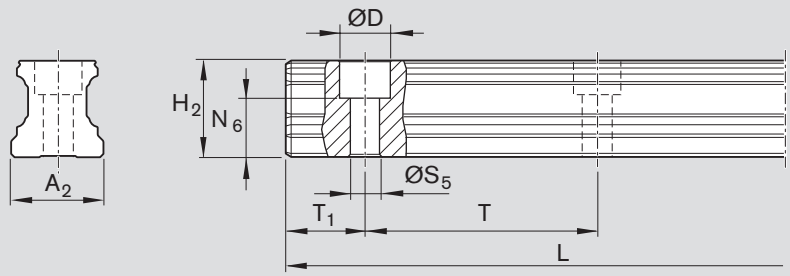


| Size | Dimensions (mm) | | | | | | | | | | Weight |
|---|---|---|---|---|---|---|---|---|---|---|---|
| | $A_2$ | D | $H_2$ 1) | $L_{max}$ | $N_6^{\pm 0.5}$ | $S_5$ | T | $T_{1\ min}$ | $T_{1S}$ 2) | $T_{1\ max}$ | (kg/m) |
| **15** | 15 | 7.4 | 16.20 | 1 856 | 10.3 | 4.5 | 60 | 10 | 28.0 | 50 | 1.4 |
| **20** | 20 | 9.4 | 20.55 | 3 836 | 13.2 | 6.0 | 60 | 10 | 28.0 | 50 | 2.4 |
| **25** | 23 | 11.0 | 24.25 | 3 836 | 15.2 | 7.0 | 60 | 10 | 28.0 | 50 | 3.2 |
| **30** | 28 | 15.0 | 28.35 | 3 836 | 17.0 | 9.0 | 80 | 12 | 38.0 | 68 | 5.0 |
| **35** | 34 | 15.0 | 31.85 | 3 836 | 20.5 | 9.0 | 80 | 12 | 38.0 | 68 | 6.8 |

## Accessories

– Plastic Mounting Hole Plugs

| Size | Single cap | |
|---|---|---|
| | Part numbers 3) | Weight (g) |
| **15** | R1605 100 84 | 0,05 |
| **20** | R1605 800 84 | 0,10 |
| **25** | R1605 200 84 | 0,30 |
| **30** | R1605 300 84 | 0,60 |
| **35** | R1605 300 84 | 0,60 |

1) Dimension $H_2$ without cover strip
2) Recommended: preferred dimension $T_{1S}$ with tolerances ± 0.75.
3) Only this part number permitted when ordering replacements for mounting hole plugs

Ball Guide Rails, Resist NR II

# SNS for mounting from below

**R2047 .0. ..**

**Notes for mounting:**
- Follow the mounting instructions!
- Send for the publication “Mounting Instructions for Ball Rail Systems.”
- Composite guide rails also available.

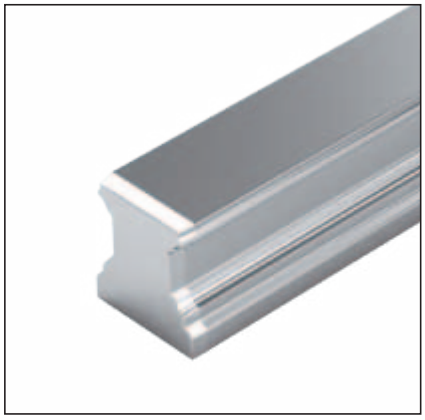

**Options and part numbers**

| Size | Ball guide rail with size | Accuracy class | | | Number of sections ., Rail length L (mm), .... | | Hole spacing T (mm) | Recommended rail length according to formula $L = n_B \cdot T - 4$ mm |
|---|---|---|---|---|---|---|---|---|
| | | N | H | P | One-piece | Composite | | Maximum number of holes $n_B$ |
| **15** | R2047 10 | 4 | 3 | 2 | 31, .... | 3., .... | 60 | 30 |
| **20** | R2047 80 | 4 | 3 | 2 | 31, .... | 3., .... | 60 | 64 |
| **25** | R2047 20 | 4 | 3 | 2 | 31, .... | 3., .... | 60 | 64 |
| **30** | R2047 70 | 4 | 3 | 2 | 31, .... | 3., .... | 80 | 48 |
| **35** | R2047 30 | 4 | 3 | 2 | 31, .... | 3., .... | 80 | 48 |
| **e.g.** | R2047 70 | | 3 | | 31, 1676 | | | |

**Ordering example 1:**
**(up to $L_{max}$)**
Options:
- Ball Guide Rail NR II, SNS
- Size 30
- Accuracy class H
- One-piece
- Rail length L = 1676 mm

Part number:
R2047 703 31, 1676 mm

**Ordering example 2:**
**(over $L_{max}$)**
Options:
- Ball Guide Rail NR II, SNS
- Size 30
- Accuracy class H
- **2 sections**
- Rail length L = 5116 mm

Part number:
R2047 703 3**2**, 5116 mm

## Ball Guide Rails SNS

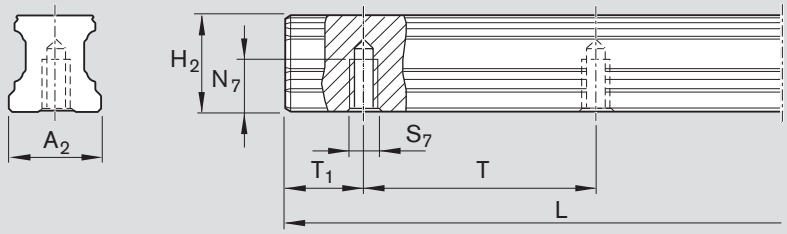


| Size | Dimensions (mm) | | | | | | | | | Weight |
|---|---|---|---|---|---|---|---|---|---|---|
| | $A_2$ | $H_2$ 1) | $L_{max}$ | $N_7$ | $S_7$ | T | $T_{1min}$ | $T_{1S}$ 2) | $T_{1\,max}$ | (kg/m) |
| **15** | 15 | 16.20 | 1 856 | 7.5 | M5 | 60 | 10 | 28.0 | 50 | 1.4 |
| **20** | 20 | 20.55 | 3 836 | 9.0 | M6 | 60 | 10 | 28.0 | 50 | 2.4 |
| **25** | 23 | 24.25 | 3 836 | 12.0 | M6 | 60 | 10 | 28.0 | 50 | 3.2 |
| **30** | 28 | 28.35 | 3 836 | 15.0 | M8 | 80 | 12 | 38.0 | 68 | 5.0 |
| **35** | 34 | 31.85 | 3 836 | 15.0 | M8 | 80 | 12 | 38.0 | 68 | 6.8 |

1) Dimension $H_2$ without cover strip
2) Recommended: preferred dimension $T_{1S}$ with tolerances ± 0.75.

# Notes on Lubrication

⚠ **H1 lubricants or release agents (preservatives) only have H1 approval in the neat, i.e. unmixed, condition (including the condition at the point of lubrication). A mixture of two H1 approved lubricants or preservatives does not have H1 approval.**

⚠ **If other lubricants than those specified are used, this may lead to a reduction in the relubrication intervals, the achievable travel in short-stroke applications, and the load capacities. Possible chemical inter-actions between the plastic materials, lubricants and preservative oils must also be taken into account.**

⚠ **Do not use greases containing solid particles (e.g., graphite or $MoS_2$)!**

⚠ **If the application conditions involve dirt, vibrations, impacts, etc., we recommend shortening the re-lubrication intervals accordingly. Even under normal operating conditions, the system must be relubricated at the latest after 2 years due to aging of the grease.**

⚠ **The seals for the ball runner blocks NRFG must be coated with the relevant lubricant before installation to ensure that they are not dry during start-up, which would cause them to wear out faster.**

⚠ **Ball runner blocks NRFG must never be put into operation without initial lubrication.**
**The ball runner blocks are shipped without initial lubrication or preservative oil.**

⚠ **Ball guide rails Resist NR II are coated with preservative oil before shipping.**
**They must be cleaned before installation.**

## Where special conditions of use are involved, please consult us. For example, in the following cases:

- Other lubricants
- Frequent cleaning cycles
- Exposure to process media
- Extreme environmental conditions

# Lubrication using a grease gun

**Grease type**
Rexroth recommends the following greases with NSF-H1 certification:
– VP 874 (from Chemie-Technik)
– Berulub FG H 2 SL (from Bechem)
The latest product information as well as product and material safety data sheets on these lubricants can be obtained from the relevant manufacturer.

**Initial lubrication of the runner blocks (basic lubrication)**

**Stroke ≥ 2 · runner block length $B_1$ (normal stroke)**
- Install and lubricate one lube fitting per runner block, at **either** of the two end caps!

Initial lubrication is applied in three partial quantities as specified in Table 1:
1. Grease the runner block with the first partial quantity as per Table 1, pressing it in slowly with the help of a grease gun.
2. Slide runner block back and forth over 3 · runner block length $B_1$ for three full cycles.
3. Repeat steps 1. and 2. two more times.
4. Make sure there is a visible film of grease on the guide rail.

| Size | Initial lubrication (normal stroke) Part number R20.. ... 14 |
|---|---|
| | Partial quantity (cm³) |
| 15 | 0,4 (3x) |
| 20 | 0,7 (3x) |
| 25 | 1,4 (3x) |
| 30 | 2,2 (3x) |
| 35 | 2,2 (3x) |

Table 1

⚠ **Refer to the Notes on Lubrication!** ☞ 40

**Stroke < 2 · runner block length $B_1$ (short stroke)**
- Install and lubricate two lube fittings per runner block, one on **each** of the two end caps!

Initial lubrication is applied to each fitting in three partial quantities as specified in Table 2:
1. Grease each fitting on the runner block with the first partial quantity as per Table 2, pressing it in slowly with the help of a grease gun.
2. Slide runner block back and forth over 3 · runner block length $B_1$ for three full cycles.
3. Repeat steps 1. and 2. two more times.
4. Make sure there is a visible film of grease on the guide rail.

| Size | Initial lubrication (short stroke) Part number R20.. ... 14 | |
|---|---|---|
| | Partial quantity per port (cm³) | |
| | left | right |
| 15 | 0,4 (3x) | 0,4 (3x) |
| 20 | 0,7 (3x) | 0,7 (3x) |
| 25 | 1,4 (3x) | 1,4 (3x) |
| 30 | 2,2 (3x) | 2,2 (3x) |
| 35 | 2,2 (3x) | 2,2 (3x) |

Table 2

⚠ **Refer to the Notes on Lubrication!** ☞ 40

# Lubrication using a grease gun (continued)

**Relubrication of runner blocks**

**Stroke ≥ 2 · runner block length $B_1$ (normal stroke)**

- When the relubrication interval according to Graph 1 ☞ 43 has been reached, relubricate twice, adding the partial quantity according to Table 3 each time.

1. Grease the runner block with the first partial quantity as per Table 3, pressing it in slowly with the help of a grease gun.
2. Slide runner block back and forth over 3 · runner block length $B_1$ for three full cycles.
3. Repeat steps 1. and 2. two more times.
4. Make sure there is a visible film of grease on the guide rail.

| Size | Relubrication (normal stroke)<br>Part number<br>R20.. ... 14<br>Partial quantity (cm³) |
|---|---|
| 15 | 0.4 (2x) |
| 20 | 0.7 (2x) |
| 25 | 1.4 (2x) |
| 30 | 2.2 (2x) |
| 35 | 2.2 (2x) |

Table 3

⚠ **Refer to the Notes on Lubrication!** ☞ 40

**Stroke < 2 · runner block length $B_1$ (short stroke)**

- When the relubrication interval according to Graph 1 ☞ 43 has been reached, relubricate twice per port, adding the partial quantity according to Table 4 each time.

1. Grease each fitting on the runner block with the first partial quantity as per Table 4, pressing it in slowly with the help of a grease gun.
2. At each lubrication cycle the runner block should be traversed back and forth for three full cycles over a stroke of 3 • runner block length $B_1$; the minimum stroke requirement in all cases is three full cycles over runner block length $B_1$.
3. Repeat steps 1. and 2. two more times.
4. Make sure there is a visible film of grease on the guide rail.

| Size | Relubrication (short stroke)<br>Part number<br>R20.. ... 14<br>Partial quantity per port (cm³) | |
|---|---|---|
| | left | right |
| 15 | 0.4 (2x) | 0.4 (2x) |
| 20 | 0.7 (2x) | 0.7 (2x) |
| 25 | 1.4 (2x) | 1.4 (2x) |
| 30 | 2.2 (2x) | 2.2 (2x) |
| 35 | 2.2 (2x) | 2.2 (2x) |

Table 4

⚠ **Refer to the Notes on Lubrication!** ☞ 40

**Load-dependent relubrication intervals for grease lubrication using grease guns**

**The following conditions apply:**
- Ball runner blocks NRFG, part number: R20.. ... 14
- Grease lubricant VP 874 or Berulub FG H 2 SL
- No exposure to metalworking fluids
- Standard seals
- Ambient temperature: T = + 20 up to + 30 °C

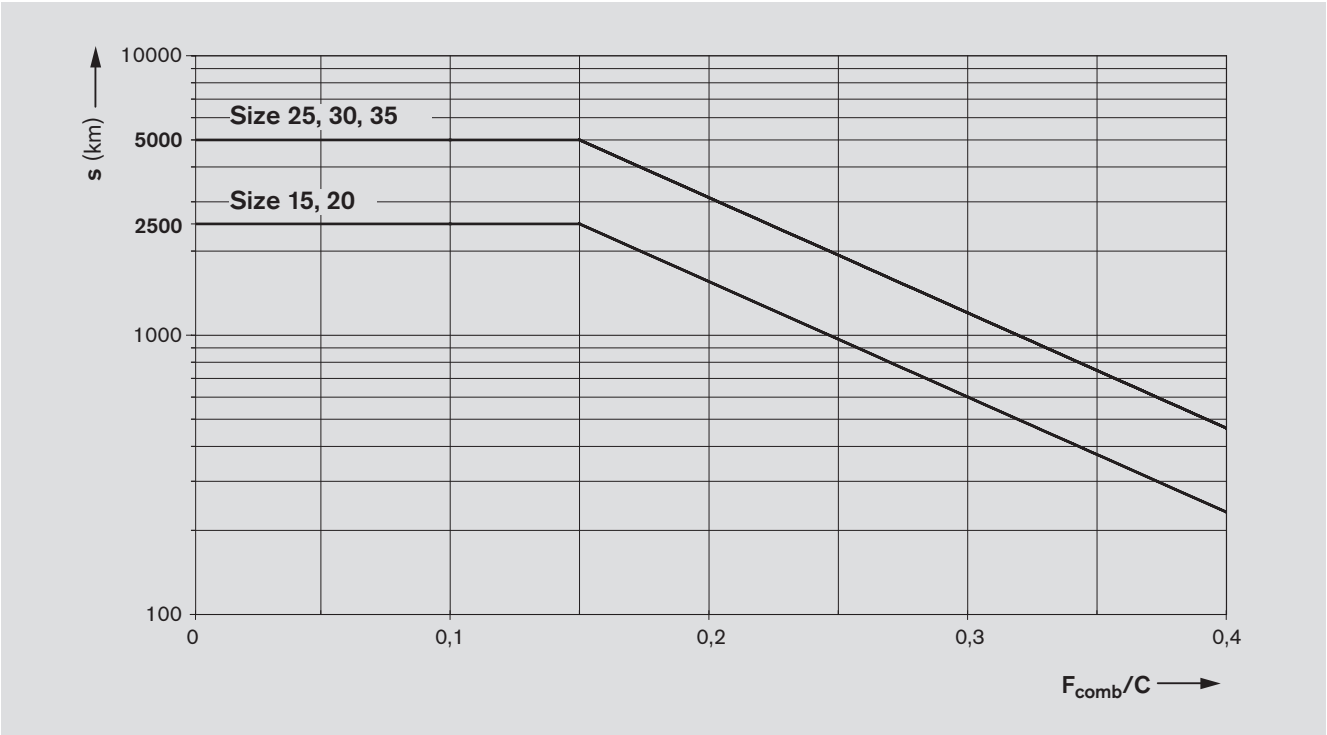


Graph 1

**Key to graphs**

**Key to graphs**

C = dynamic load capacity (N)
$F_{comb}$ = combined equivalent dynamic load on bearing (N)
$F_{comb}/C$ = load ratio (–)
s = relubrication interval expressed as travel (km)

**Definition of $F_{comb}/C$**

The load ratio $F_{comb}/C$ is the quotient of the equivalent dynamic load on the bearing at the combined load on the bearing $F_{comb}$ (taking account of the internal preload force $F_{pr}$) divided by the dynamic load capacity C ☞ 5.

⚠ **Refer to the Notes on Lubrication!** ☞ 40

Rexroth
Bosch Group

Bosch Rexroth AG
Linear Motion and
Assembly Technologies
Ernst-Sachs-Straße 100
97424 Schweinfurt, Germany
Tel. +49 9721 937-0
Fax +49 9721 937-275
www.boschrexroth.com/dcl

**Find your local contact person here:**
www.boschrexroth.com/addresses-dcl

Subject to technical modifications

© Bosch Rexroth AG 2011
Printed in Germany
R310EN 2226 (2011.04)
EN • DC-IA/MKT