rexroth
A Bosch Company

Cam Roller Guides

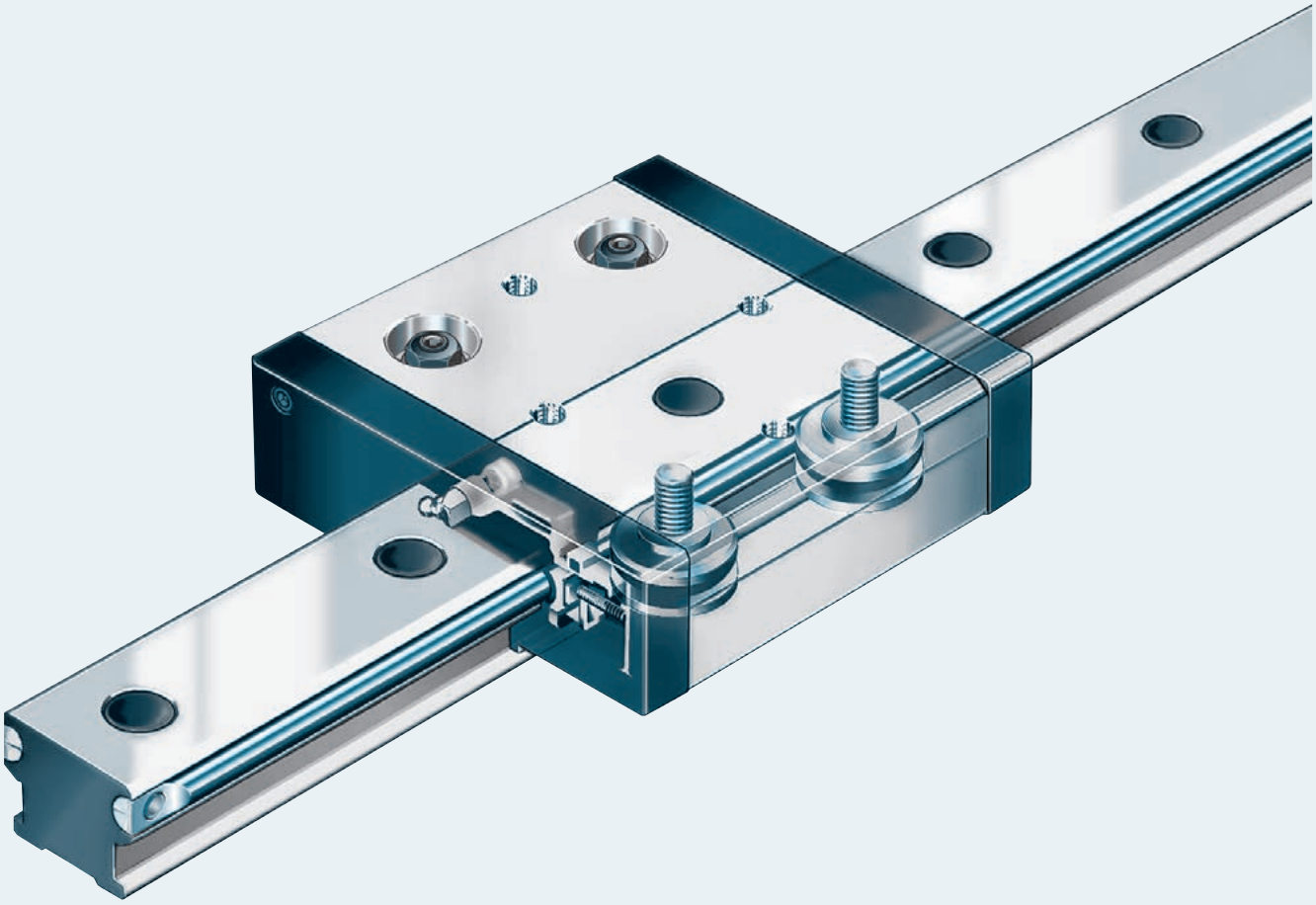

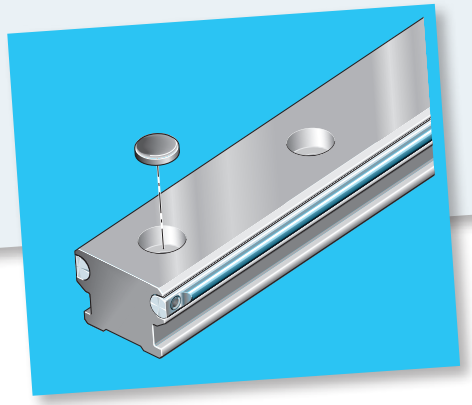

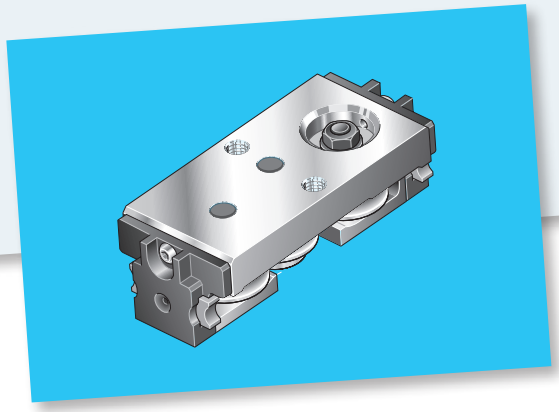

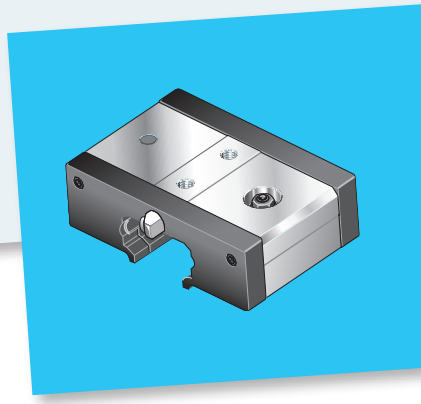

www.boschrexroth.com

Cam Roller Guides

Product Overview **4**
Combination options 6
Maximum Permissible Loads 10
Technical Data **14**
Life Expectancy and Static Load Safety Factor **17**
Mounting Instructions **19**
Lubrication **23**
Standard Runner Blocks **24**
Super Runner Blocks **26**
Profile Runner Blocks **28**
Guide Rails **30**
Single/Double Bearing Runner Blocks with Adjustment Screws **36**
Guide Rails for Bearing Runner Blocks **40**
U-type Cam Roller Guides **46**
U-type Runner Block R1905 46
U-type Guide Rail R1923 48
Accessories **50**
Dead stop R1910 5.. 00 50
Lubrication unit R1910 442 00 for profile runner blocks 51
Cam Rollers with Spigots, Assembly Kits **52**

Product Overview

Rexroth Cam Roller Guides have been specially developed for use in handling and automation applications.

Features:
- High permissible speeds
- Compact design
- Light weight
- Easy mounting
- Low friction and extremely low-noise operation
- Complete guideway systems
- Interchangeability
- Elements can be individually ordered and separately stocked

Standard Runner blocks
- High load capacity in all planes of load application. High moment capacity about all axes
- Oil applicator/wiper unit with large oil reservoir at both ends
- Lube nipple port at either end
- The runner block can be simply adjusted to zero clearance by means of eccentric pins
- 2-row angular contact thrust ball bearing, sealed and lubricated for life

Profile Runner Block
- The runner block is adjusted to zero clearance before leaving the factory
- Wiper and lubrication units are available as accessories

Standard guide rail
- Guide shaft support made of anodized aluminum
- Optional mounting hole plugs
- Secured guide tracks made of corrosion-resistant precision steel shafts

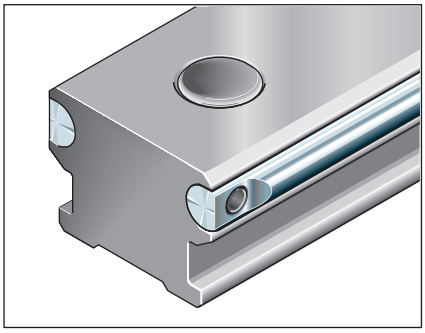

Standard guide rail
Secured guide tracks made of corrosion-resistant precision steel shafts

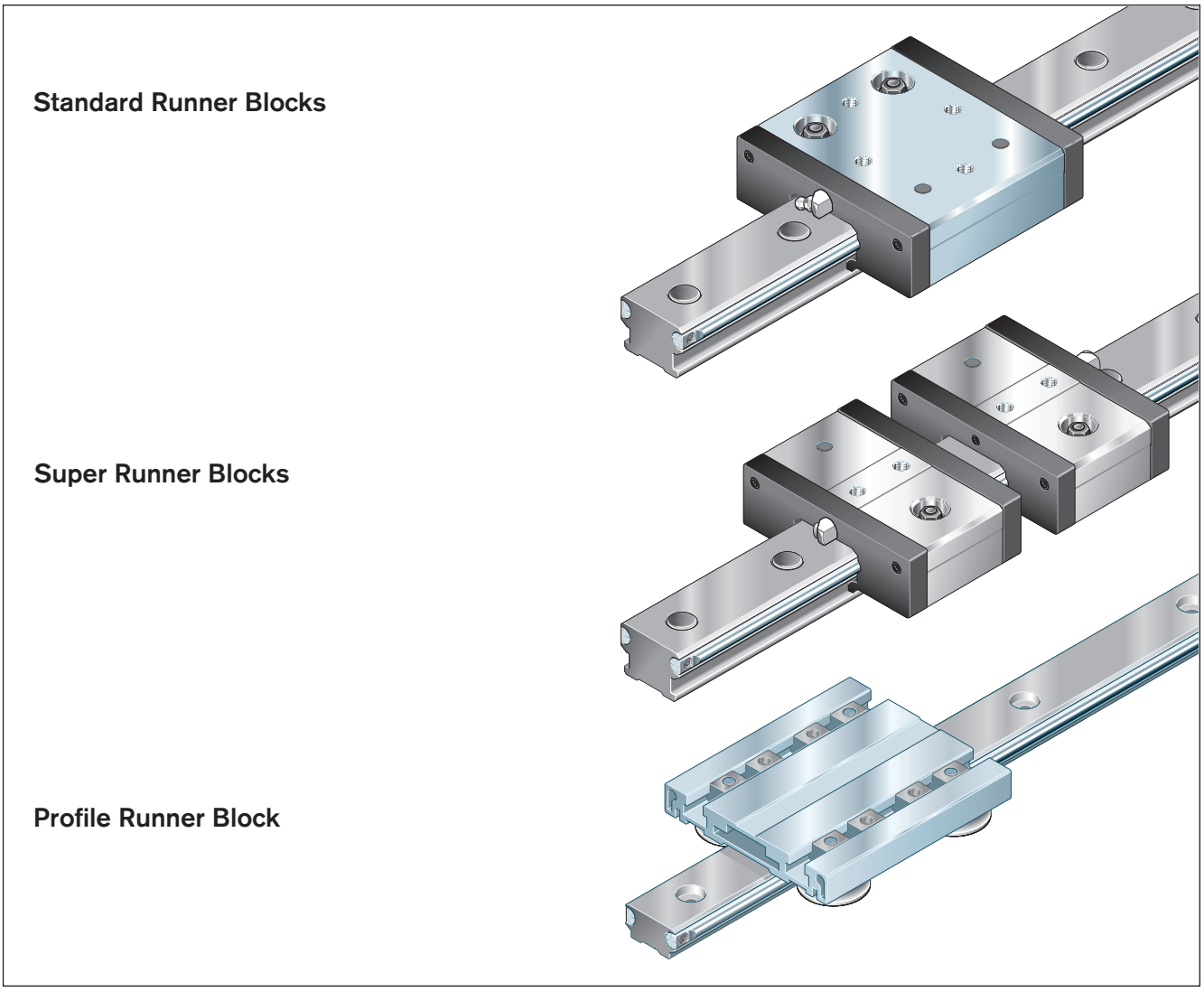

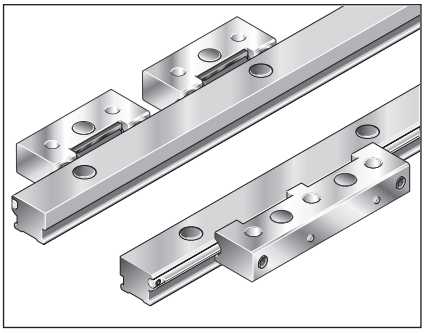

Single Bearing Runner Blocks, Double Bearing Runner Blocks
On two half-rails

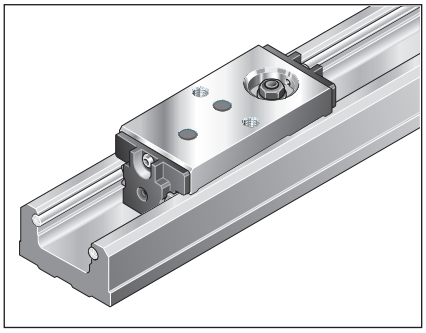

U-type Cam Roller Guides

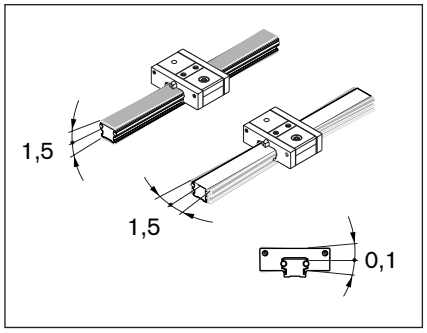

Super Runner Blocks
For uneven mounting surfaces or other alignment errors:

Product Overview

Combination options

			Page	20 Part number / Size - Version	
Standard Runner Block	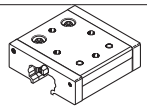		24	1902-119-00	
Super Runner Block	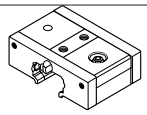		26	1906-119-00	
Profile Runner Block	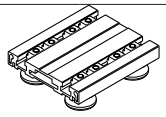		28		
Guide Rails	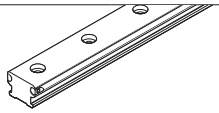	Standard	30	1921-119-31	
	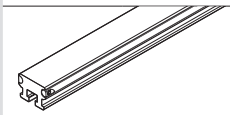	With T-Slot	32		
	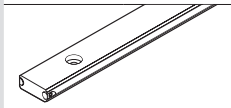	Low-Profile	34		
Single Bearing Runner Block	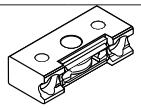		36		
Double Bearing Runner Block	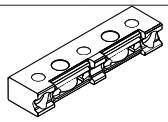		38		
Guide Rails for Single Double Bearing Runner Blocks	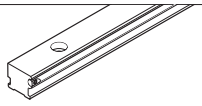	Standard half-rail	40		
	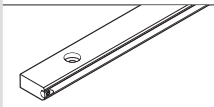	Low-Profile half-rail	42		
	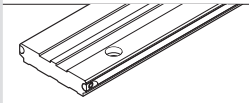	Wide	44		

Size						
25	32		42	52		
1902-125-00	1902-132-00			1902-152-00	1902-252-00 52-h (high loads)	1902-352-00 52-sh (extreme loads)
1906-125-00						
			1907-142-00			
1921-125-31	1921-132-31	1921-232-31 32-2 (twice as many mounting holes)	1921-142-31	1921-152-31	1921-252-31 52-2 (twice as many mounting holes)	1921-452-31 52-4 (four times as many mounting holes)
1922-025-31	1922-032-31					
	1924-132-31	1924-323-31 32-2 (twice as many mounting holes)		1924-152-31	1924-252-31 52-2 (twice as many mounting holes)	1924-452-31 52-4 (four times as many mounting holes)
	1903-132-10			1903-152-10	1903-252-10 52-h (high load)	1903-352-10 52-sh (extreme loads)
	1904-132-10			1904-152-31	1904-252-10 52-h (high load)	1904-352-10 52-sh (extreme loads)
	1925-132-31	1925-232-31 32-2 (twice as many mounting holes)		1925-152-31	1925-252-31 52-2 (twice as many mounting holes)	1925-452-31 52-4 (four times as many mounting holes)
	1926-132-31	1926-232-31 32-2 (twice as many mounting holes)		1926-152-31	1926-252-31 52-2 (twice as many mounting holes)	1926-252-31 52-4 (four times as many mounting holes)
					1927-152-31	

Product Overview

Combination options

			Page	Part number / Size - Version	20
U-type Cam Roller Guides	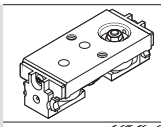	U-type Runner Block	46	1905-119-00	
	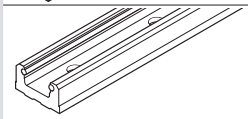	U-type Guide Rail	48	1923-119-31	
Accessories	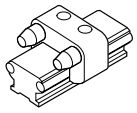	Dead stop	50		
	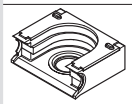	Lubrication unit for profile runner blocks	51		
Modules Cam Rollers with Eccentric Spigot	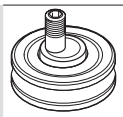		52	R1900 119 00	
Modules Cam Rollers with Central Spigot	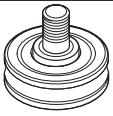		54	R1900 119 01	

	Size					
	25	32	42	52		
		1910-532-00		1910-552-00		
			R1910 442 00			
	R1900 125 00	R1900 132 00		R1900 152 00	R1900 152 10 52-h	R1900 152 20 52-sh
	R1900 125 01	R1900 132 01		R1900 152 01	R1900 152 11 52-h	R1900 152 21 52-sh

Product Overview

Maximum Permissible Loads

Important: Not to be used for calculating service life!
For service life calculations use the load capacities and moments given in the tables relating to the individual versions.

Maximum permissible force loads

			20
Standard Runner Block 1902-, 1907-		$F_{max\ y}$ (N)*	700
		$F_{max\ y0}$ (N)*	700
	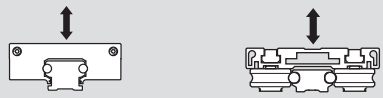	$F_{max\ z}$ (N)	400
		$F_{max\ z0}$ (N)	600
Super Runner Block RH1906		$F_{max\ y}$ (N)*	350
		$F_{max\ y0}$ (N)*	350
	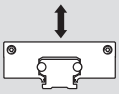	$F_{max\ z}$ (N)	200
		$F_{max\ z0}$ (N)	300

Maximum permissible moment loads

Standard Runner Block R1902-, R1907-	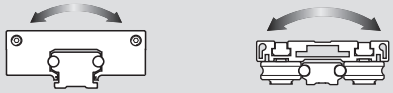	$M_{max\ x}$ (Nm)	3,2
		$M_{max\ x0}$ (Nm)	4,8
		$M_{max\ y}$ (Nm)	6,8
		$M_{max\ y0}$ (Nm)	10,2
	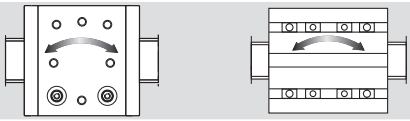	$M_{max\ z}$ (Nm)	12
		$M_{max\ z0}$ (Nm)	12
Runner Block RH1906	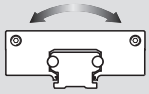	$M_{max\ x}$ (Nm)	1,6
		$M_{max\ x0}$ (Nm)	2,4

* Observe permissible side force on the rail (see Mounting Instructions).

	Size - Version							
	25	**32**	**32** **32-2**	**42** 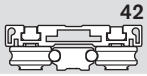	**52**	**52** **52-2**	**52-h** **52-2**	**52-sh** **52-4**
	700	1000	1400	3000	2500	3500	4500	8000
	700	1000	1400	3000	2500	3500	4500	8000
	400	850	850	1500	1500	1500	2400	4800
	660	1400	1400	2500	2500	2500	4000	7900
	350							
	350							
	200							
	330							
	3,8	11	11	27	32	32	50	101
	6	18	18	42	52	52	84	166
	9	26	26	63	45	45	126	288
	15	42	42	106	75	75	210	474
	16	30	42	127	75	105	236	480
	16	30	42	127	75	105	236	480
	1,9							
	3							

Product Overview

Maximum Permissible Loads

Important: Not to be used for calculating service life!
For service life calculations use the load capacities and moments given in the tables relating to the individual versions.

				20	
Maximum permissible force loads					
Four Single/Two Double Bearing Runner Blocks	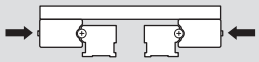	$F_{max\ y}$	(N)		
		$F_{max\ y0}$	(N)		
	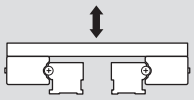	$F_{max\ z}$	(N)		
		$F_{max\ z0}$	(N)		
U-type Runner Block	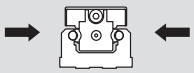	$F_{max\ y}$	(N)	350	
		$F_{max\ y0}$	(N)	350	
	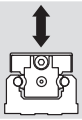	$F_{max\ z}$	(N)	200	
		$F_{max\ z0}$	(N)	300	
Maximum permissible moment loads					
Four Single/Two Double Bearing Runner Blocks	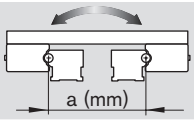	$M_{max\ x}$	(Nm)		
		$M_{max\ x0}$	(Nm)		
Four Single Bearing Runner Blocks	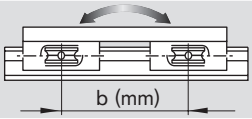	$M_{max\ y}$	(Nm)		
		$M_{max\ y0}$	(Nm)		
	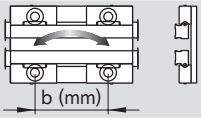	$M_{max\ z}$	(Nm)		
		$M_{max\ z0}$	(Nm)		
Two Double Bearing Runner Blocks	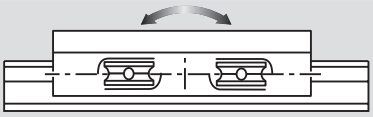	$M_{max\ y}$	(Nm)		
		$M_{max\ y0}$	(Nm)		
	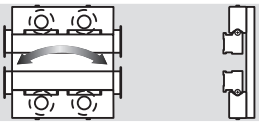	$M_{max\ z}$	(Nm)		
		$M_{max\ z0}$	(Nm)		
U-type Runner Block		$M_{max\ x}$	(Nm)	1,4	
		$M_{max\ x0}$	(Nm)	2,2	
	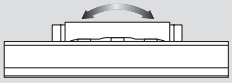	$M_{max\ y}$	(Nm)	3,4	
		$M_{max\ y0}$	(Nm)	5,1	
	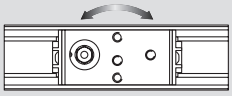	$M_{max\ z}$	(Nm)	6,1	
		$M_{max\ z0}$	(Nm)	6,1	

	Size - Version						
25	32	32 32-2	52	52 52-2	52-h 52-2	52-sh 52-4
	1000	1400	2500	3500	4500	8000
	1000	1400	2500	3500	4500	8000
	850	850	1500	1500	2400	4800
	1400	1400	2500	2500	4000	7900
	0,42 · a	0,42 · a	0,75· a	0,75 · a	1,2 · a	2,4 · a
	0,7 · a	0,7 · a	1,2 · a	1,2 · a	2 · a	3,9 · a
	0,42 · b	0,42 · b	0,75· b	0,75 · b	1,2 · b	2,4 · b
	0,7 · b	0,7 · b	1,2 · b	1,2 · b	2 · b	3,9 · b
	0,5 · b	0,7 · b	1,2 · b	1,7 · b	2,2 · b	4 · b
	0,5 · b	0,7 · b	1,2 · b	1,7 · b	2,2 · b	4 · b
	21	21	49	49	91	194
	35	35	83	83	152	320
	25	35	83	116	171	324
	25	35	83	116	171	324

Technical Data

Maximum travel speed
at medium loads

$v_{max} = 10$ m/s

Permissible operating temperature

t = –20 °C up to + 80 °C

Acceleration
Higher acceleration rates are permissible as long as slip is avoided.
To do this, adjust preload F_v using the eccentric rollers, see chart.

⚠ **Increasing the preload will reduce the maximum permissible load.**

$a_{max} = 50$ m/s²

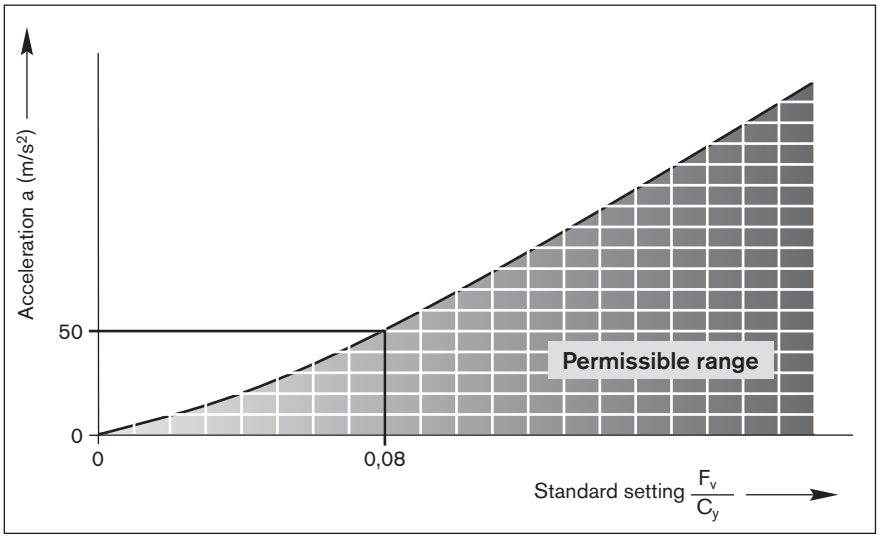

Rigidity
The rigidity can be improved by increasing the preload using the eccentric rollers.

Accuracy

Rexroth Guide Rails are manufactured to very high precision standards.
Higher accuracies are available on request.
Tolerance for H: ± 0.2 mm

Maximum difference in H
on the same guide rail: 0.1 mm

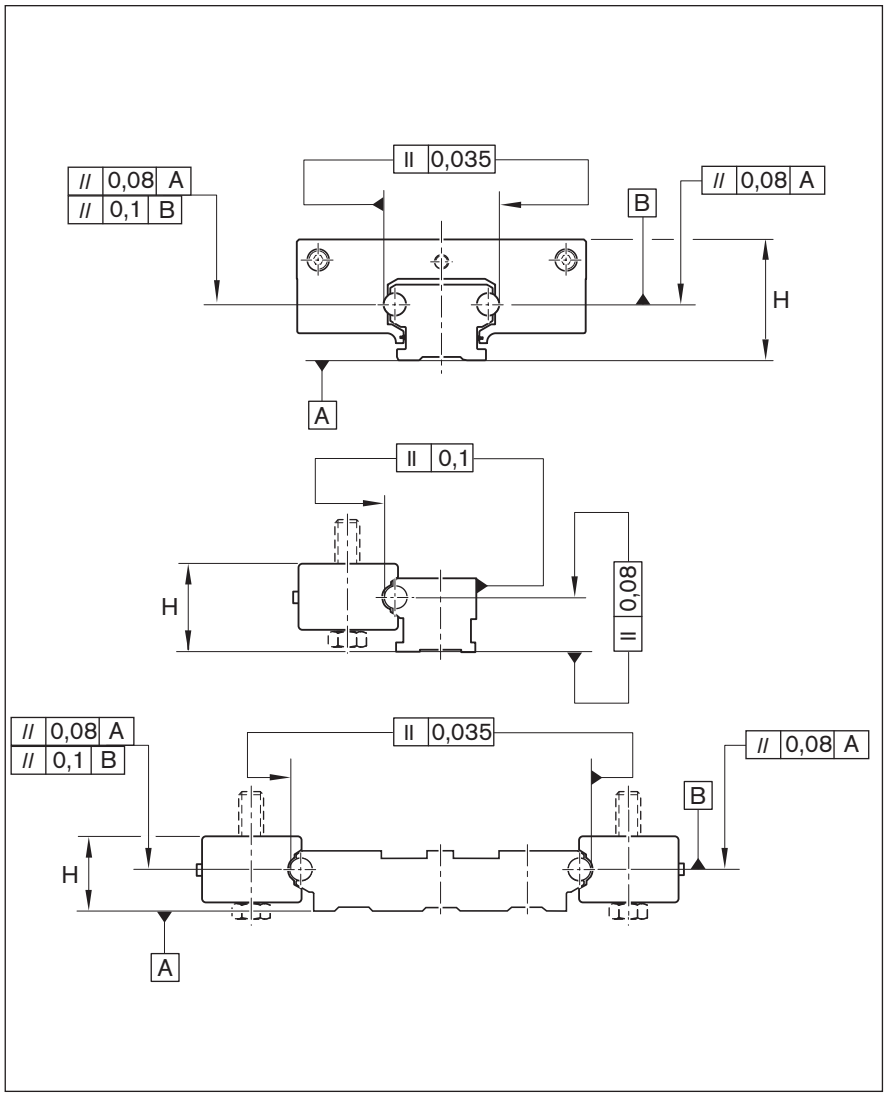

Technical Data

Sectional characteristics of guide rails

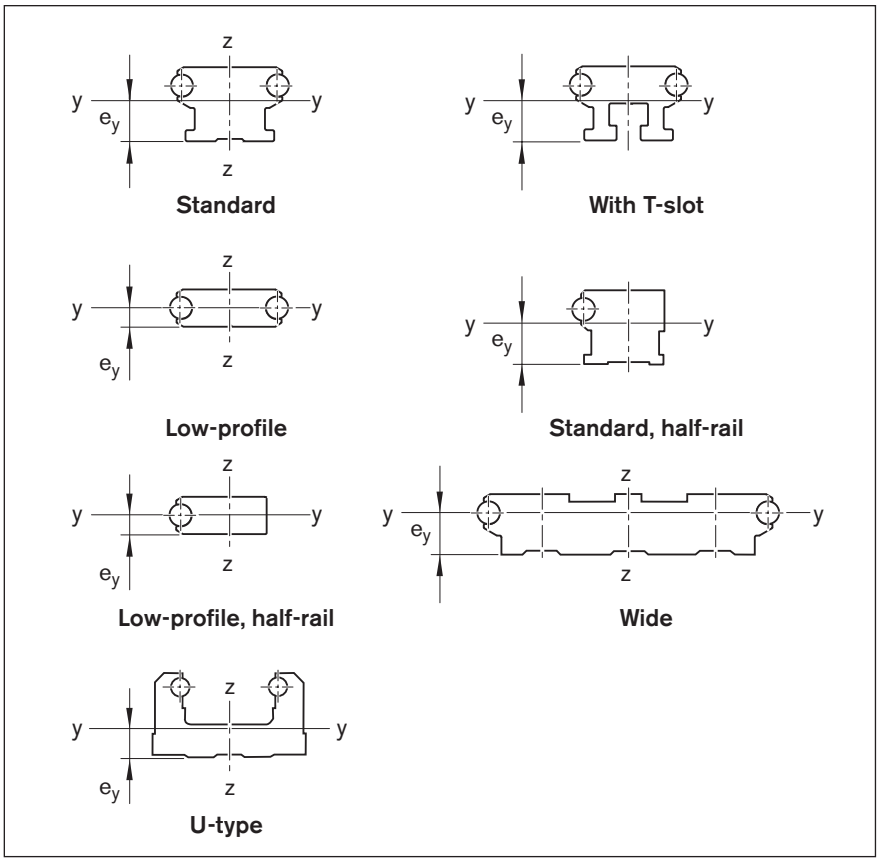

e_y : Centroid distance
$I_{y,z}$: Second moment of inertia
$W_{y,z}$: Section modulus

	Size	Cross-sectional area	Neutral axis				
					y-y		z-z
		A (mm²)	e_y (mm)	I_y (mm⁴)	W_y (mm³)	I_z (mm⁴)	W_z (mm³)
Standard	**20**	168	6,0	2060	343	3090	364
	25	244	7,4	4738	623	6432	613
	32	435	10,4	14551	1399	19272	1357
	42	685	11,4	19628	1722	78534	4363
	52	1222	17,6	117945	6701	148971	6477
With T-slot	**25**	194	8,1	4155	513	6191	590
	32	355	11,4	12295	1079	18666	1315
	52	913	17,6	82725	4596	140984	6130
Low-profile	**32**	234	5,0	2163	433	11412	804
	52	690	9,0	20750	2306	91104	3961
Standard, half-rail	**32**	397	10,5	13182	1255	14724	1115
	52	1116	17,7	105926	5985	111856	5251
Low-profile, half-rail	**32**	217	5,0	1913	383	8841	665
	52	633	9,0	18142	2016	68209	3202
Wide	**52**	2492	12,4	119636	2099	2378777	41733
U-type	**20**	360	7,0	8604	782	42000	2545

Life Expectancy and Static Load Safety Factor

Life Expectancy
of one Cam Roller

The nominal service life expectancy L in meters or L_h in hours is attained or exceeded by at least 90% of a large number of identical rollers.

when subject to force loads

If the Cam Roller Guide is subject to a centrally-acting force F_y or F_z, calculate the nominal travel life using formulas (1) and (2):

The force F must not exceed the maximum permissible force given in the "Maximum Permissible Loads" tables.

(1) $$L = \left(\frac{C_{y,z}}{F}\right)^3 \cdot 10^5$$

(2) $$L_h = \frac{L}{2 \cdot s \cdot n \cdot 60}$$

L	=	nominal life expectancy	(m)
L_h	=	nominal life expectancy	(h)
$C_{y,z}$	=	dynamic load capacity	(N)
F	=	equivalent dynamic load	(N)
s	=	length of stroke	(m)
n	=	stroke repetition rate (complete cycles)	(min^{-1})

when subject to moment loads

If the Cam Roller Guide is subject to a moment M acting about the x, y or z axis only, calculate the nominal travel life using formulas (3) and (4):

The moment M must not exceed the maximum permissible moment load given in the "Maximum Permissible Loads" tables.

(3) $$L = \left(\frac{M_{x,y,z}}{M}\right)^3 \cdot 10^5$$

(4) $$L_h = \frac{L}{2 \cdot s \cdot n \cdot 60}$$

L	=	nominal life expectancy	(m)
L_h	=	nominal life expectancy	(h)
$M_{x,y,z}$	=	dynamic moment	(Nm)
M	=	equivalent dynamic moment load	(Nm)
s	=	length of stroke	(m)
n	=	stroke repetition rate (complete cycles)	(min^{-1})

Note

The above formulas for calculation of life expectancy apply only in applications subject to a single force acting centrally in the y or z axis, or a single moment acting about the x, y or z axis.

For applications subject to a combination of forces from different directions or moments about different axes, or any combination of forces and moments, please consult us.

Coordinate system

The following coordinate system is used to define the direction of action of forces and moments:

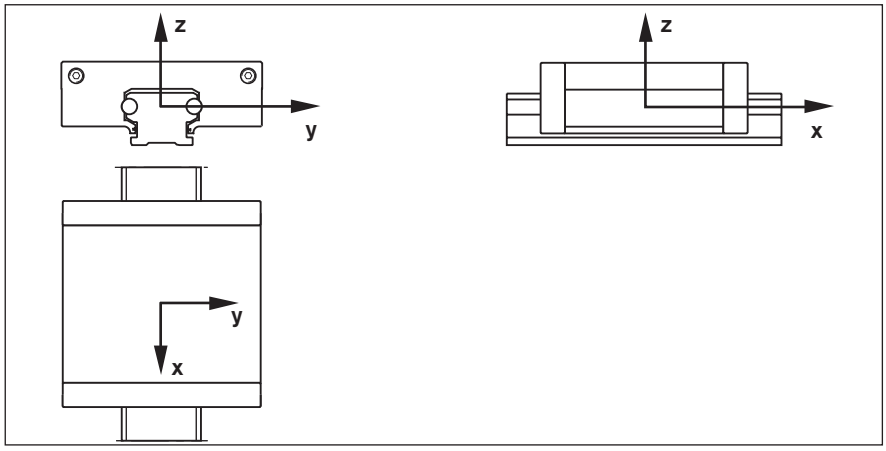

Life Expectancy and Static Load Safety Factor

Static Load Safety Factor

when subject to force loads

If the Cam Roller Guide is subject to a centrally-acting force F_{y0} or F_{z0}, calculate the static load safety factor using formula (5):

$$S_0 = \frac{C_{y0,\,z0}}{F_0} \qquad (5)$$

The force F_0 must not exceed the maximum permissible force given in the "Maximum Permissible Loads" tables.

S_0	=	static load safety factor	(-)
$C_{y0,z0}$	=	static load capacity	(N)
F_0	=	equivalent static load	(N)

when subject to moment loads

If the Cam Roller Guide is subject to a moment M_0 acting about the x, y or z axis only, calculate the static load safety factor using formula (6):

$$S_0 = \frac{M_{x0,\,y0,\,z0}}{M_0} \qquad (6)$$

The moment M_0 must not exceed the maximum permissible moment load given in the "Maximum Permissible Loads" tables.

S_0	=	static load safety factor	(-)
$M_{x0,y0,z0}$	=	static moment	(Nm)
M_0	=	equivalent static moment load	(Nm)

Note

The above formulas for calculation of the static load safety factor apply only in applications subject to a single force acting centrally in the y or z axis, or a single moment acting about the x, y or z axis.

For applications subject to a combination of forces from different directions or moments about different axes, or any combination of forces and moments, please consult us.

Mounting Instructions

General Instructions

Rexroth Cam Roller Guides are high-quality products and should be treated with the utmost care during transportation and mounting.

All steel parts are coated with preservative oil. The preservative coating need not be removed provided the recommended lubricants are used in the application. Unfavorable environmental conditions (vibrations, major temperature fluctuations, etc.) can cause a relative shift between the aluminum frame and the rolled-in (or pressed-in) steel shafts of all guide rails. To prevent this phenomenon we recommend a positive-locking axial retention.

Guide Rail Mounting

To mount the guide rail:

- Slightly tighten screws.
- Align guide rail.
- Tighten screws to torque as shown in the table.

Standard Guide Rail (R1921-...):
If the maximum permissible load is to be utilized, install washers to ISO 7092.

Guide Rail with T-slot (R1922-...):
Washers are supplied with the rail.

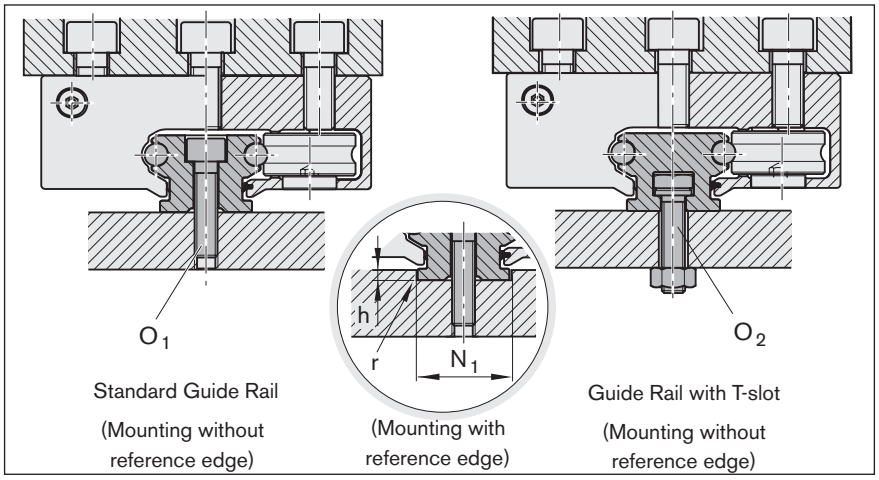

Screw sizes for guide rails

	Size - Version	20	25	32	32-2	42	52	52-2	52-4
Standard	**O_1 (ISO 4762)**	M4x16	M5x20	M6x25	M6x25	M8x25	M10x40	M10x40	M12x40
With T-slot	**O_2 (ISO 4014) (DIN EN 2417)**	–	M5	M6	–	–	M10	–	–
	N_1 min. (mm)	17,1	21,1	24,1	24,1	–	40,1	40,1	40,1
	h max. (mm)	1,0	1,5	3,0	3,0	–	5,0	5,0	5,0
	r max. (mm)	0,2	0,2	0,2	0,2	–	0,2	0,2	0,2

Permissible side loads

Recommended values for permissible side forces without additional lateral retention of the rail.

Size - Version	20	25	32	32-2	42	52	52-2	52-4
F_{per} (N)	200	330	450	900	1000	1000	1600	4000

Composite Guide Rails made up of several sections

a) Rail number
b) Joint
c) Joint number

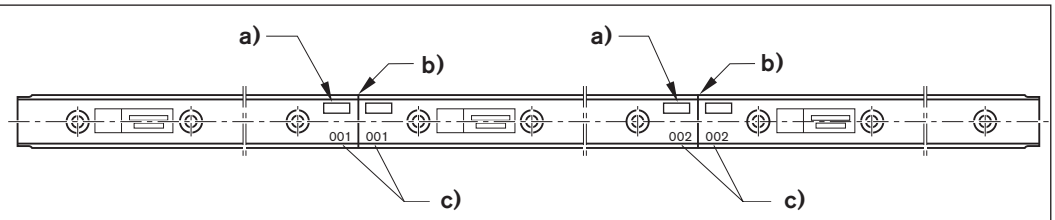

Mounting Instructions

Instructions for mounting Standard and Super Runner Blocks to the Guide Rail

To mount the runner block:
The oil applicator and wiper units ("oiling units" for short) are delivered separate to facilitate installation work.

- Lubricate wiper and lubrication units with oil before sliding (for oil, see “Lubrication”)
- Push on the first oiling unit (1):
  The felt wiper strips are automatically pressed in by the chamfers on the steel shafts.
- Carefully slide the runner block (2) onto the guide rail.
- Adjust the eccentric rollers (4a), until a slight shifting force F_R is felt (see table for recommended values).
- Tighten the hex nut to torque as shown in the table using a hex wrench to stop the pin from turning (4b).
- Mount the second oiling unit (3).
- Screw the two oiling units to the runner block (5).

⚠ **After mounting, the runner block should move freely when pushed.**

- After installation, fill oil into the lubrication unit.

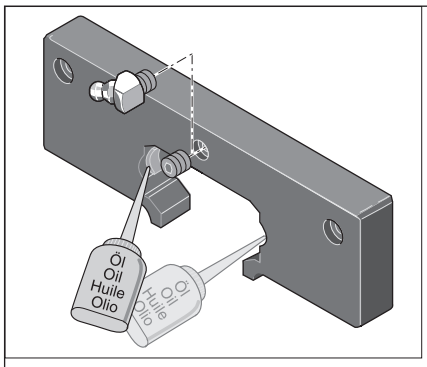

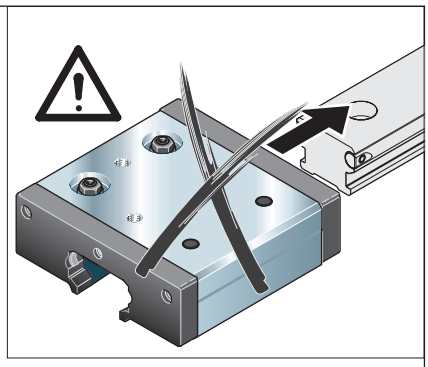

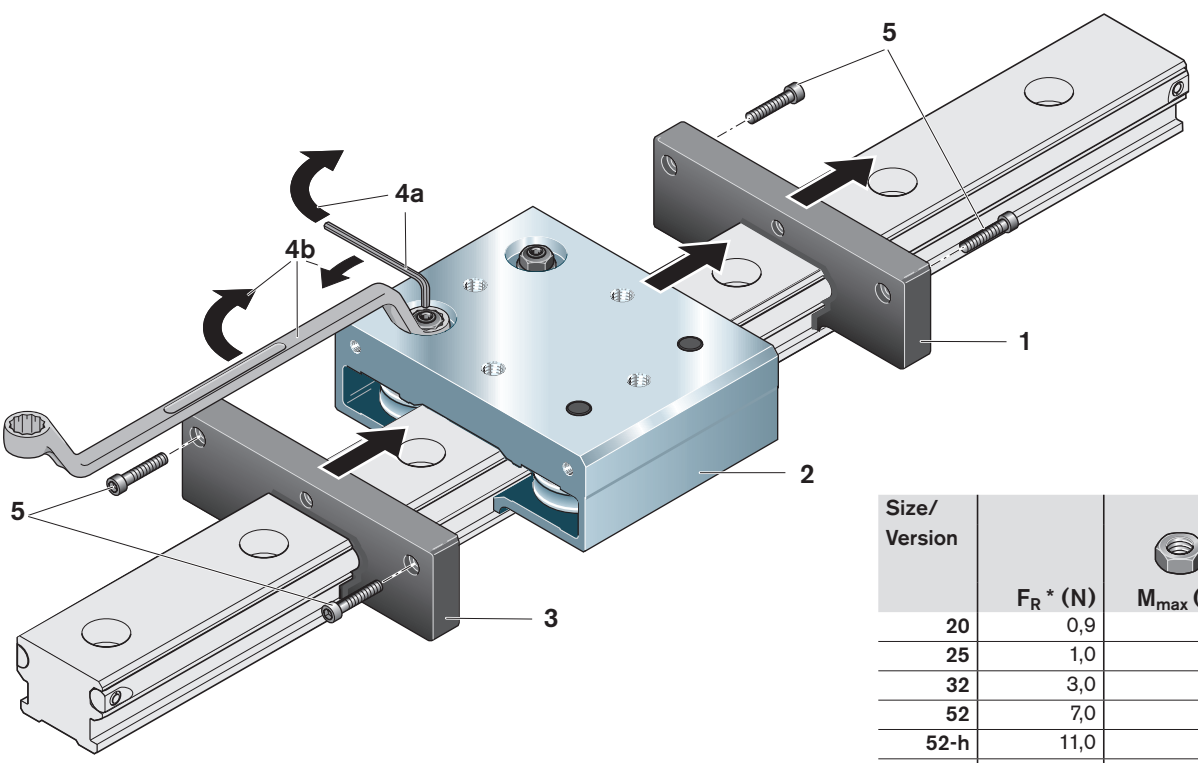

Size/ Version	F_R * (N)	4b M_{max} (Nm)
20	0,9	2,0
25	1,0	2,7
32	3,0	8,0
52	7,0	46,0
52-h	11,0	46,0
52-sh	13,0	80,0

* Computed average shifting force of the runner block for standard adjustment 0.08 C

Mounting Superstructures on Runner Blocks:

Standard Runner Block R1902, R1906

- Use screws as per table. Do not use overlong screws! Observe the minimum material strength N!
- Align the superstructure.
- Torque up the screws to the values given in the table.

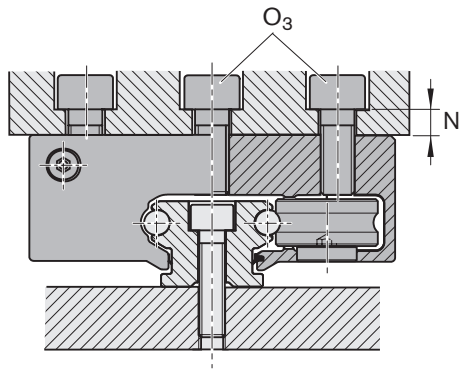

Profile Runner Block R1907-

- Use screws as per table. Do not use overlong screws! Observe the minimum material strength N!
- Align the superstructure.
- Torque up the screws to the values given in the table.

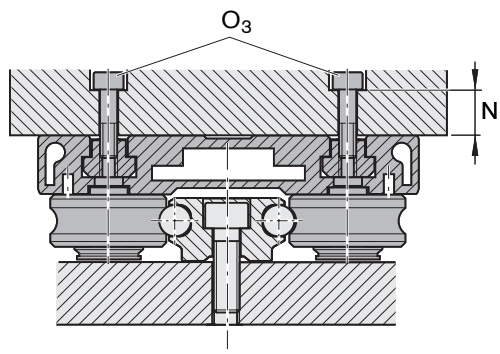

Runner Blocks

Size - Version	20	25	32	32-2	42	52	52-2
O_3 (DIN ISO 4762)	M5x16	M5x16	M8x25	M8X20	M10x30	M10x35	M12x35
N (mm)	8	7	7	7	12	12	12

Tightening torques for mounting screws

	8.8	M4	M5	M6	M8	M10	M12
	(Nm)	2,7	5,5	9,5	23	46	80

Design of mounting surface

Unevenness or distortion of mounting surfaces (adjoining structures) will impair the accuracy of the guideway and should be kept to a minimum.

Mounting Instructions

Mounting Single/Double Bearing Runner Blocks with Adjustment Screws

1. Mounting

- Align and mount the rails.
- Preassemble runner blocks (1+2) on the carriage (3). Do not yet tighten the screws.
- Align the runner blocks on one side (1) of the carriage (3) and tighten the mounting screws (4) alternately until tightening torque M_A is reached.
- Slide the carriage (3) onto the rails (5).
- Adjust the runner blocks on the opposite side (2) to zero clearance against the guide rail using adjustment screws (6). Adjust the preload.
- Alternately tighten the mounting screws (7) on the runner blocks (2) until tightening torque M_A is reached.

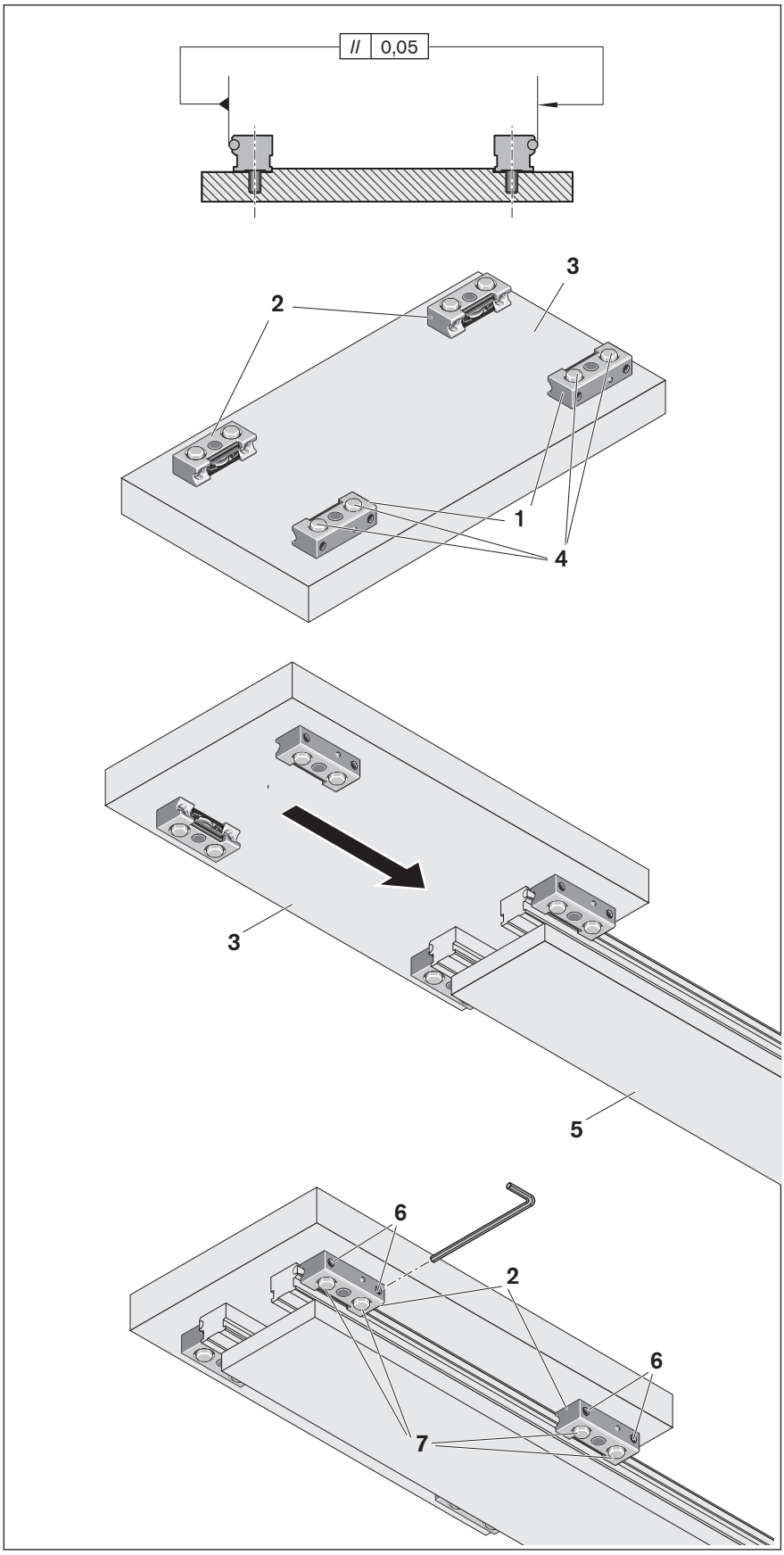

Size -Version	32	52	52-h	52-sh
M_A (Nm)	23	46	80	80

Lubrication

Lubrication

The runner blocks have an oiling unit at each end.
Apply oil to the felt wiper strips before installing runner blocks..

The lubrication plate contains a large oil container for long relubrication intervals.

Oiling unit with large oil reservoir R1910-4..

- Longer travel until in-service lubrication required: 15 · 10^5 m stroke.
- Dual function: simultaneous lubricating and wiping.
- Targeted shaft lubrication.
- Lubrication even at 90° orientation.

• For initial lubrication and relubrication, fill the oil slowly and without pressure.

Initial lubrication:

• For sizes 20 to 32, fill the entire oil volume slowly and without pressure in one stroke. For size 52, fill the oil volume in three equal partial amounts. See table for the required oil volume.

Relubrication:

• Fill oil container until oil escapes.

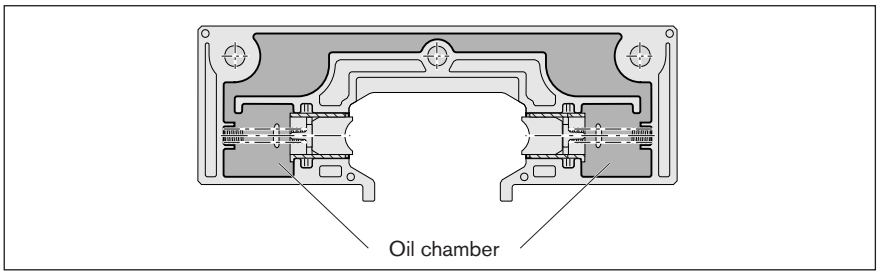

Size - Version	Part Number	Oilvolume Initial Filling (cm³)
20	R1910 419 00	2,5
25	R1910 425 00	3,0
32	R1910 432 00	6,5
52	R1910 452 00	18,0
52-h	R1910 452 10	20,0
52-sh	R1910 452 20	20,0

The lubrication unit is not a hermetically sealed, leak-proof tank. Minimal oil loss over time (lubrication interval) cannot be excluded, particularly for wall and overhead installations (droplet formation on welded seams/edges) and does not negatively affect its function.

For critical applications e.g. food processing, clean room applications please consult us.

Lubricant:
Oil lubrication of runner blocks (including U-type)

We recommend lubricant oils CLP, CGLP as per DIN 51517 with a viscosity of ISO VG 680 -1000 mm^2/s at 40 °C as per DIN 51519.

Grease lubrication of bearing runner blocks

We recommend grease lubricants to DIN 51825 - K P2 K20.
A corresponding grease Dynalub 510 is available as a 400 g cartridge.
Part number: R3416 037 00

Caution: Do not use greases containing solid lubricant particles (e.g., graphite or MoS_2).

In-service lubricating intervals will depend on the application and the ambient conditions.

- Lubricate S/D bearing runner blocks until excess grease emerges.
- For double bearing runner blocks, use both lube nipples (8)!

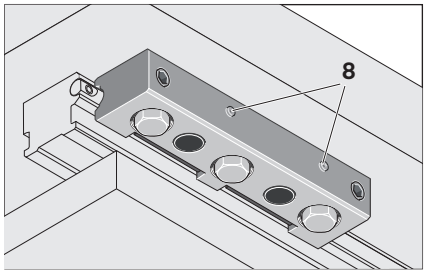

Minimum stroke length

As a rule, the stroke length should not be less than the length of the runner block. For applications with shorter stroke lengths, please consult us.

Angular contact bearings

The angular contact ball bearings in the roller elements are sealed and lubricated for life.

Standard Runner Blocks

Runner Block R1902

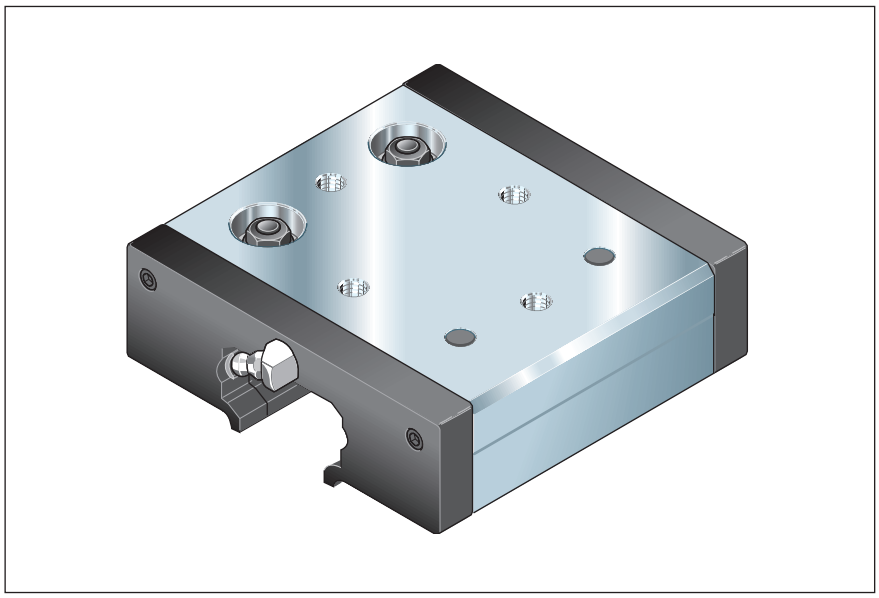

Part numbers, load capacities and moments for calculating service life

		Load capacities				Moment loads					
Size -Version	**Part number**	C_y (N)	C_{y0} (N)	C_z (N)	C_{zo} (N)	M_x (Nm)	M_{xo} (Nm)	M_y (Nm)	M_{yo} (Nm)	M_z (Nm)	M_{zo} (Nm)
20	R1902 119 00	2300	1600	1336	783	10,7	6,3	22,7	13,3	39	27
25	R1902 125 00	2550	1780	1357	803	13,0	7,6	30,5	18,0	57	40
32	R1902 132 00	7335	4560	4300	2200	56,0	29,0	129,0	66,0	220	137
52	R1902 152 00	17150	10200	10050	4900	211,0	103,0	301,0	147,0	515	306
52-h	R1902 252 00	27900	15400	16775	7630	352,0	160,0	880,0	400,0	1465	808
52-sh	R1902 352 00	31000	18200	18400	8750	390,0	184,0	1100,0	520,0	1860	1100

Important:

Observe maximum permissible loads due to forces and moments as shown in the "Maximum Permissible Loads" tables!

The part numbers refer to runner blocks with oiling units.
Part numbers for runner blocks without oiling units:
Size R1901 ... 00 (otherwise as shown in table)

Part numbers for oiling units without runner blocks:
Size 20-52 R1910 4.. 00 (otherwise as shown in table)
Size 52-h R1910 452 10
Size 52-sh R1910 452 20

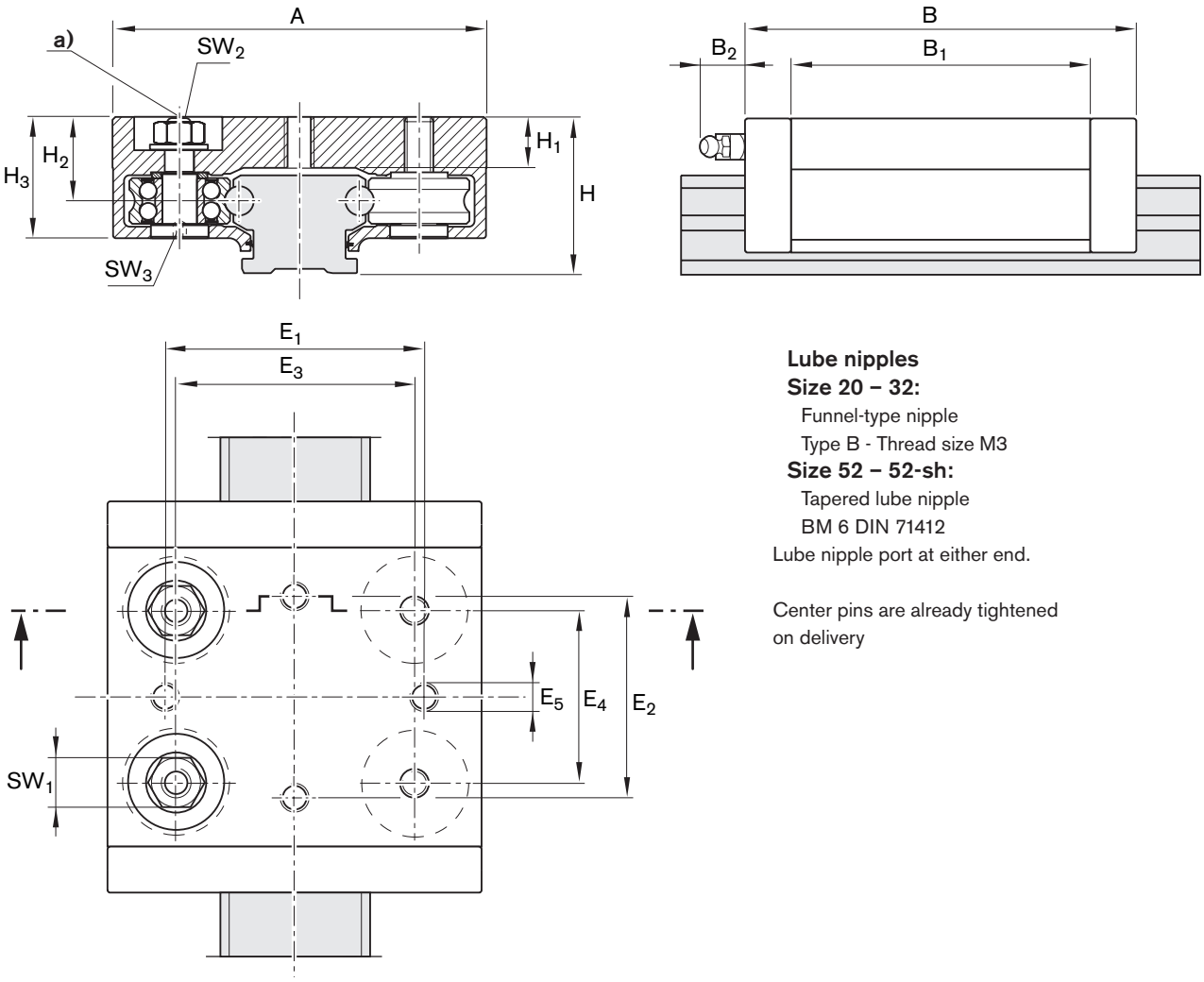

Lube nipples
Size 20 – 32:
Funnel-type nipple
Type B - Thread size M3
Size 52 – 52-sh:
Tapered lube nipple
BM 6 DIN 71412
Lube nipple port at either end.

Center pins are already tightened on delivery

a) Adjustment of eccentric pin

Size -Version	Dimensions (mm) A	B	B_1	B_2	H	H_1	H_2	H_3	E_1	E_2	E_3	E_4	E_5	SW_1	SW_2	SW_3	Mass (kg)
20	56	79	59	7	22,0	8,5	13,0	20,0	39	49	34,0	34	M5	7	2	2	0,20
25	65	95	75	7	25,0	9,0	14,4	22,3	50	60	40,0	45	M5	7	2	2	0,25
32	86	112	92	7	35,5	13,0	20,5	29,5	59	70	54,0	60	M8	10	3	4	0,56
52	130	136	104	16	54,3	19,4	29,2	42,2	90	70	83,3	60	M10	16	4	6	1,50
52-h	145	186	154	16	60,4	24,0	35,3	51,0	105	110	90,0	105	M10	16	4	6	2,60
52-sh	155	205	173	16	60,4	24,0	35,3	51,0	115	140	95,0	120	M12	18	6	8	3,30

Super Runner Blocks

Runner Block R1906

Part numbers, load capacities and moments for calculating service life

		Load capacities				Moment loads	
Size -Version	**Part number**	**C_y (N)**	**C_{y0} (N)**	**C_z (N)**	**C_{zo} (N)**	**M_x (Nm)**	**M_{xo} (Nm)**
20	R1906 119 00	1150	800	660	390	5,4	3,1
25	R1906 125 00	1275	890	670	400	6,5	3,8

Important:

Observe maximum permissible loads due to forces and moments as shown in the "Maximum Permissible Loads" tables!

The part numbers refer to runner blocks with oiling units.
Part numbers for runner blocks without oiling units:
R1906 1.. 30 (otherwise as shown in table)

Part numbers for oiling units without runner blocks:
R1910 4.. 00 (otherwise as shown in table)

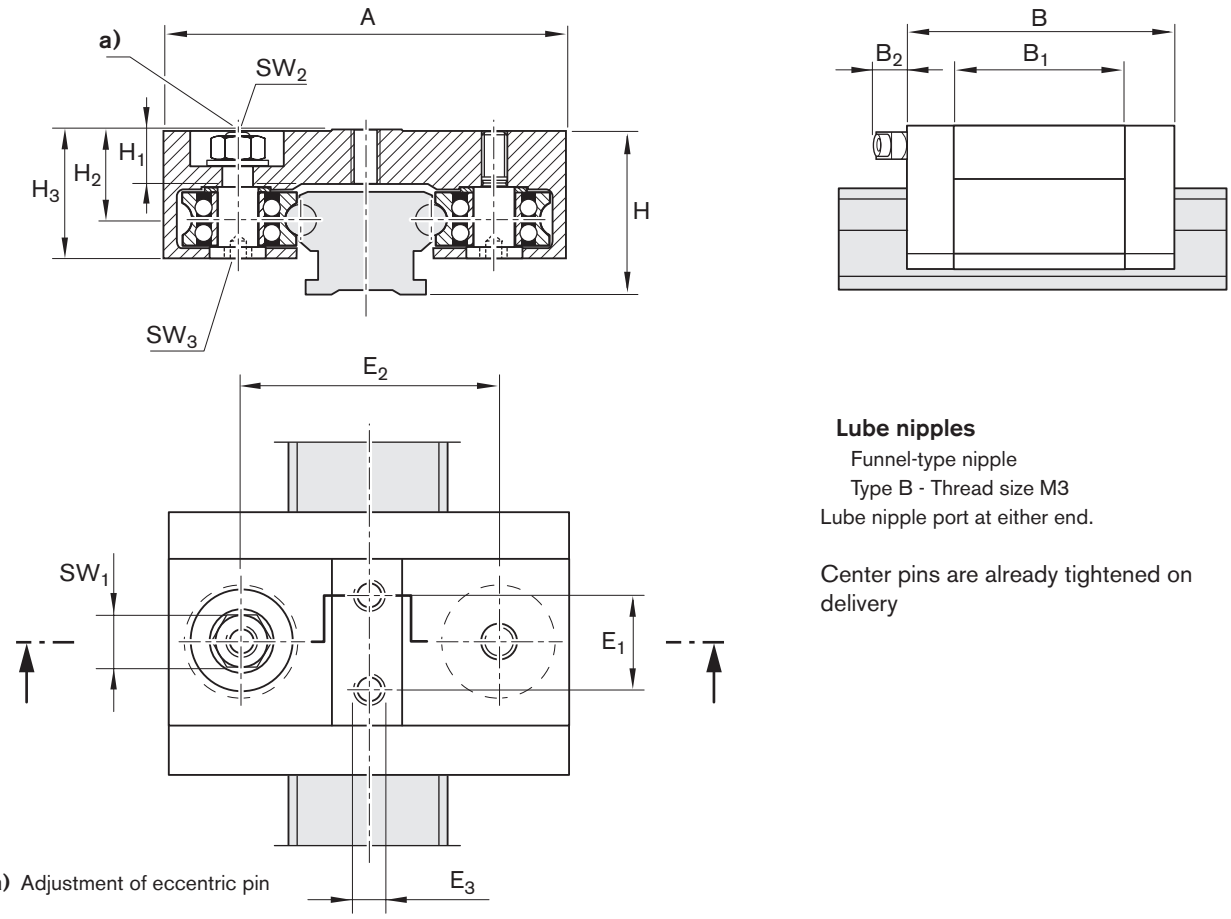

a) Adjustment of eccentric pin

Lube nipples

Funnel-type nipple

Type B - Thread size M3

Lube nipple port at either end.

Center pins are already tightened on delivery

Size -Version	Dimensions (mm) A	B	B_1	B_2	H	H_1	H_2	H_3	E_1	E_2	E_3	SW_1	SW_2	SW_3	Mass (kg)
20	56	50	30	7	22,0	8,5	13,0	20,0	17	34	M5	7	2	2	0,10
25	65	50	30	7	25,0	9,0	14,4	22,3	20	40	M5	7	2	2	0,10

Profile Runner Blocks

Profile Runner Block R1907

Accessories:
Optionally, a separate lubrication unit is available for each cam roller of the profile runner block.
Part number: R1910 442 00
We recommend the complete lubrication with four lubrication units.
For more information, see “Accessories”.

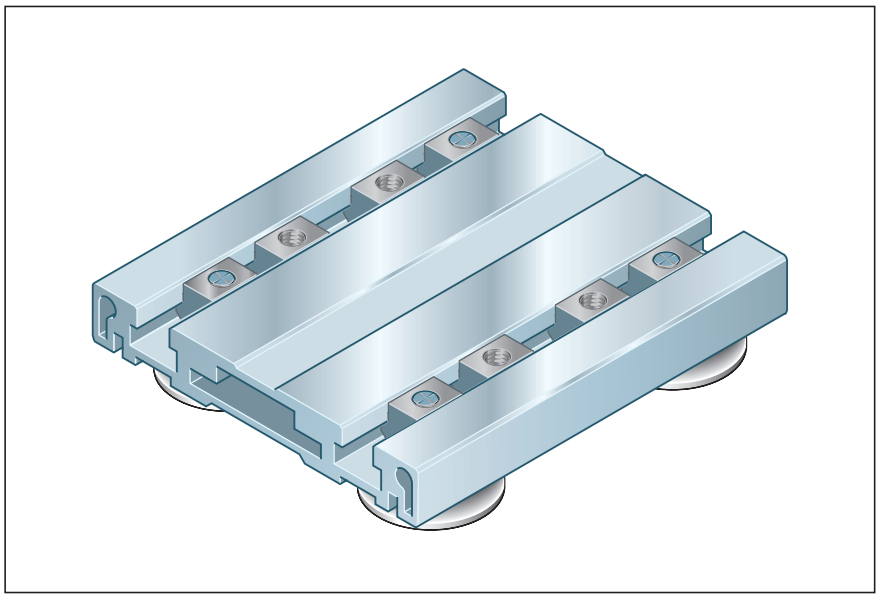

Part numbers, load capacities and moments for calculating service life

		Load capacities				Moment loads					
Size -Version	Part number	C_y (N)	C_{y0} (N)	C_z (N)	C_{zo} (N)	M_x (Nm)	M_{xo} (Nm)	M_y (Nm)	M_{yo} (Nm)	M_z (Nm)	M_{zo} (Nm)
42	R1907 142 00	17150	10200	10050	4900	162	97	430	258	729	433

Important:

Observe maximum permissible loads due to forces and moments as shown in the "Maximum Permissible Loads" tables!

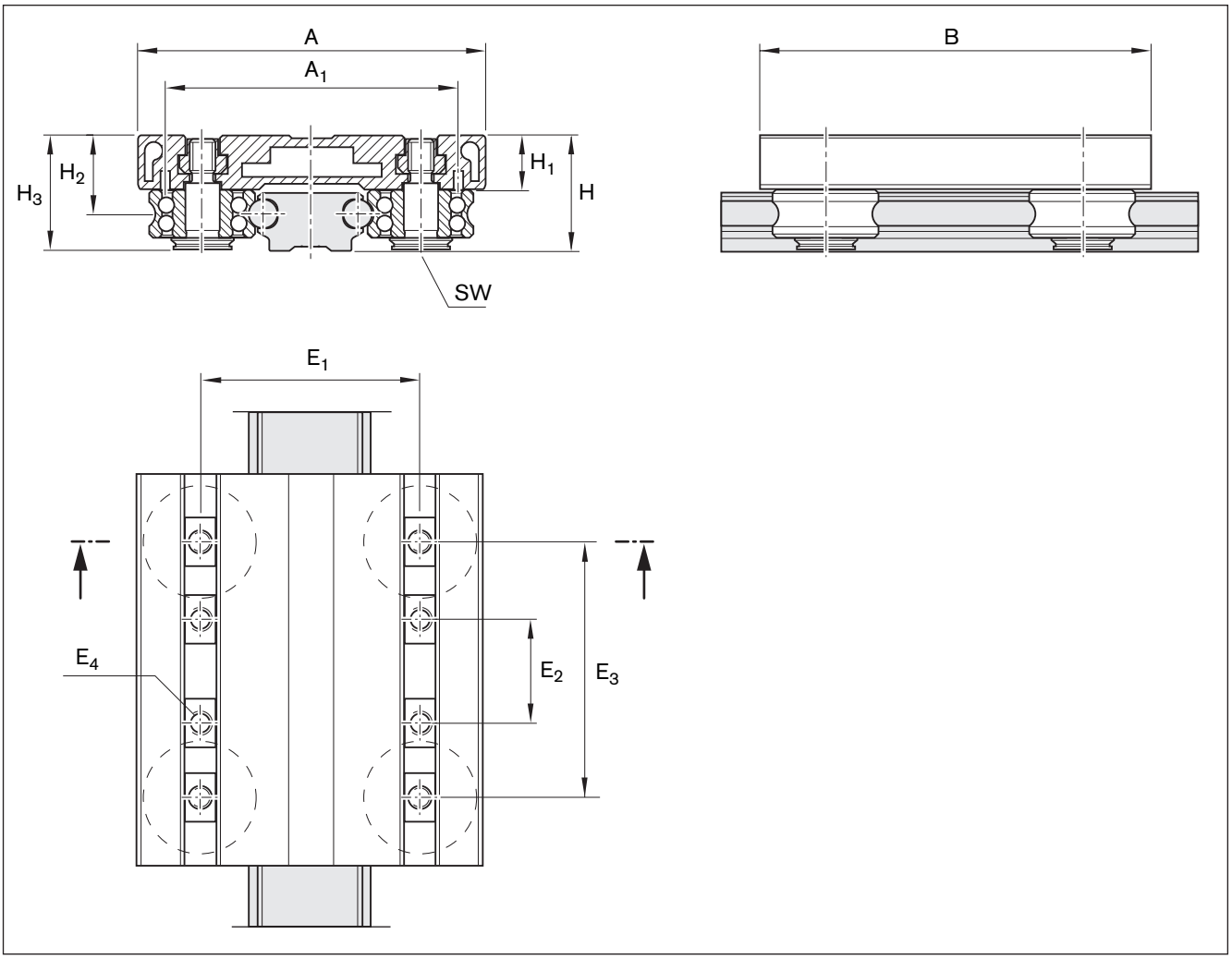

Size	Dimensions (mm)												Mass
-Version	A	A_1	B	H	H_1	H_2	H_3	E_1	E_2	E_3	E_4	SW_1	(kg)
42	116	98,5	150	39	18	26,4	38,1	73	15 - 55	85	M8	6	1,03

Guide Rails

Guide Rail standard R1921

- For mounting from above
- Optional mounting hole plugs (to be ordered separately)
- Corrosion resistant steel shafts to DIN EN ISO 683-17 / EN 10088

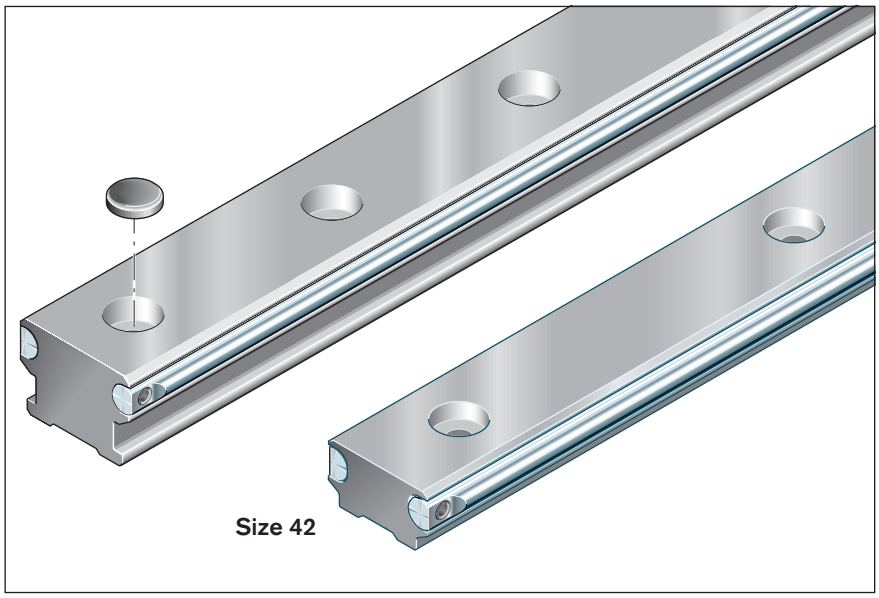

Part numbers, lengths

Size -Version	Standard length[1] (mm)	L_{max} (mm)	without holes Part number Length:,...(mm)	with holes Part number Length:,...(mm)	Mounting hole plugs Part number Quantity:,...	Holes per meter [1]
20	3500	7000	R1921 019 31,...	R1921 119 31,...	R1605 800 80,...	16
25	3500	7000	R1921 025 31,...	R1921 125 31,...	R1605 800 80,...	16
32	3500	7000	R1921 032 31,...	R1921 132 31,...	R1605 200 80,...	8
32-2	3500	7000	–	R1921 232 31,...	R1605 200 80,...	16
42	3500	7000	R1921 042 31,...	R1921 142 31,...	R1605 300 80,...	8
52	3500	7000	R1921 052 31,...	R1921 152 31,...	R1605 400 90,...	4
52-2	3500	7000	–	R1921 252 31,...	R1605 400 90,...	8
52-4	3500	7000	–	R1921 452 31,...	R1605 500 90,...	16

1) Running tracks up to 3500 mm are made of one-piece precision steel shafts.
2) Number for one meter at preferred length T_{1S}

Size -Version	Hole spacing T (mm)	Recommended rail lengths Number of holes/Rail length L (mm)			
20, 25, 32-2, 52-4	62,5	2/121	10/621	18/1121	40/2496
		4/246	12/746	20/1246	50/3125
		6/371	14/871	24/1496	56/3496
		8/496	16/996	30/1871	
32, 42, 52-2	125	2/246	10/1246	18/2246	28/3496
		4/496	12/1496	20/2496	
		6/746	14/1746	22/2746	
		8/996	16/1996	24/2996	
52	250	2/496	6/1496	14/3496	
		3/746	8/1996		
		4/996	10/2496		
		5/1246	12/2996		

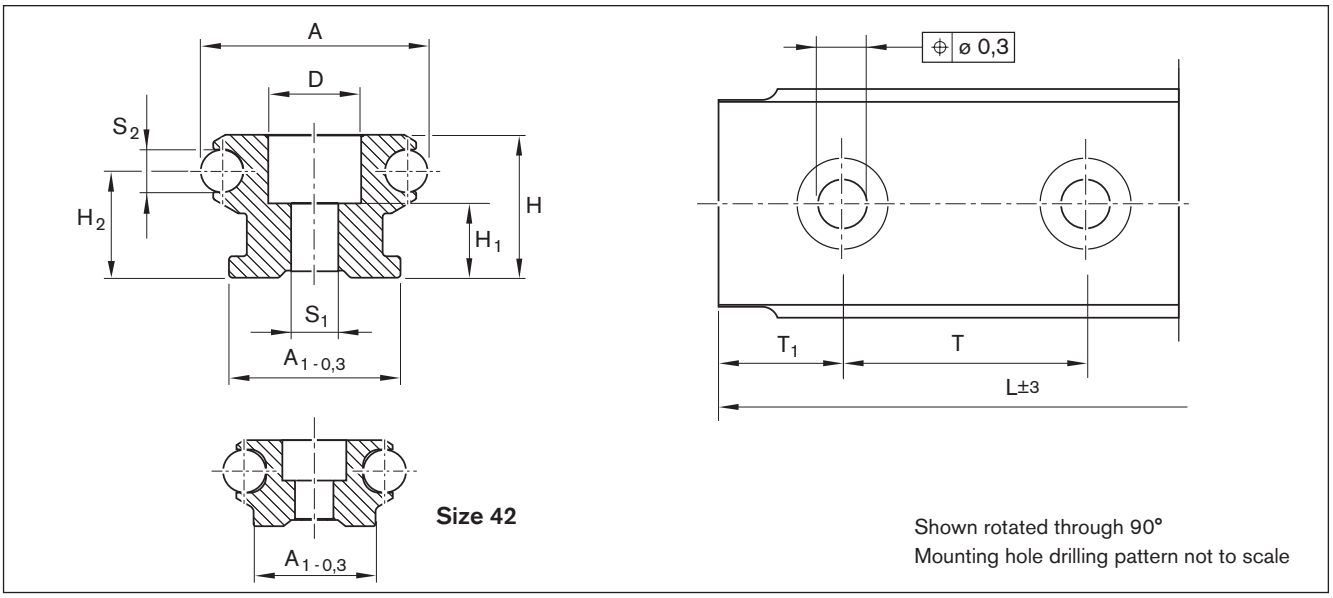

Size -Version	Dimensions (mm) A	A_1	H	H_1	H_2	D	S_1	S_2	T	T_{1S}	$T_{1\,min.}$	Mass (kg)
20	20	17	12	5,0	9,0	9,4	4,5	4	62,5	29,25	13	0,60
25	25	21	15	6,0	10,6	9,4	5,5	6	62,5	29,25	13	1,00
32	32	24	20	9,5	15,0	11,0	6,5	6	125,0	60,50	13	1,60
32-2	32	24	20	9,5	15,0	11,0	6,5	6	62,5	29,25	13	1,60
42	42	28	20	9,0	12,6	15,0	9,0	10	125,0	60,50	13	2,68
52	52	40	34	19,0	25,1	20,0	11,0	10	250,0	123,00	20	4,40
52-2	52	40	34	19,0	25,1	20,0	11,0	10	125,0	60,50	20	4,40
52-4	52	40	34	17,0	25,1	24,0	13,0	10	62,5	29,25	20	4,40

Ordering a guide rail

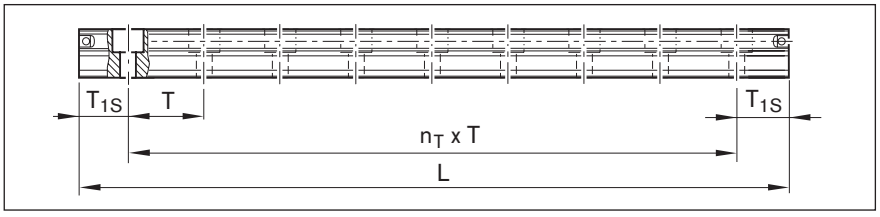

Calculating guide rail length

Recommendation:
Use preferred length T_{1S}.
- Observe minimum spacing $T_{1\,min}$! (see table)
- T_1 is the same at either end of the rail.

$L = n_B \cdot T - 4$
or
$L = n_T \cdot T + 2 \cdot T_{1S}$

L	=	rail length	(mm)
T	=	hole spacing*)	(mm)
T_{1S}	=	preferred dimension*)	(mm)
n_B	=	number of holes	
n_T	=	number of spaces	

*) see table for values

Ordering example

Guide rail: size 25
Desired length: 620 to 625 mm
n_B = 620/T = 620/62.5 = 9.92 rounded to whole numbers = 10 holes,
n_T = n_B - 1 = 9

Rail ordering data:
Part number, length (mm)
T_1 / n_T x T / T_1 (mm)
R1921 125 31, 621
29,25 / 9 x 62,5 / 29,25
Mounting hole plug ordering data:
Part number, quantity
R1605 800 90, 10

Length to be ordered

L = 10 · 62.5 - 4 = 621 mm or
L = 9 · 62.5 + 2 · 29.25 = 621 mm

Guide Rails

Guide Rail with T-slot R1922

- For mounting from below
- Washers supplied
  (quantity according to spacing T)
- Corrosion resistant steel shafts to
  DIN EN ISO 683-17 / EN 10088

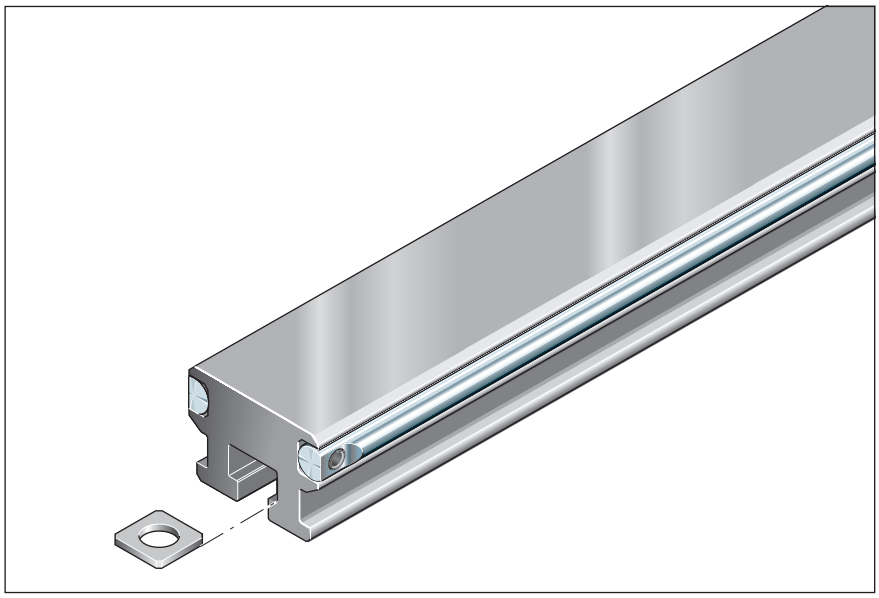

Part numbers, lengths

Guide Rail with T-slot			
Size	**Standard length**[1]	**L_{max}** (mm)	**Part number Length:,...(mm)**
25	3500	7000	R1922 025 31,...
32			R1922 032 31,...

1) Running tracks up to 3500 mm are made of one-piece precision steel shafts.

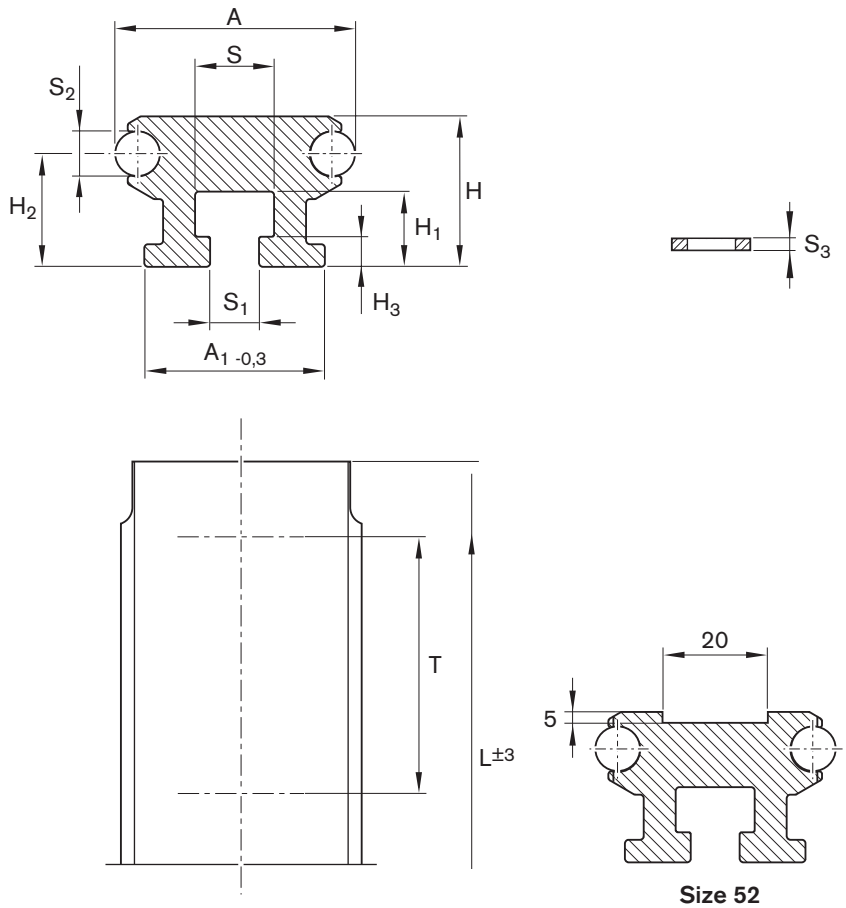

Size 52

Note

See "Mounting Instructions, Guide Rail Mounting".

Dimensions (mm)												Mass
Size	**A**	**A_1**	**H**	**H_1**	**H_2**	**H_3**	**S**	**S_1**	**S_2**	**S_3**	**T**	**(kg/m)**
25	25	21	15	8,0	10,6	3,0	8,2	5,5	6	1,0	62,5	0,95
32	32	24	20	10,0	15,0	4,0	10,5	6,5	6	1,6	125,0	1,60

T = Maximum distance between mounting screws

Guide Rails

Guide Rail, low profile R1924

– Corrosion resistant steel shafts to DIN EN ISO 683-17 / EN 10088

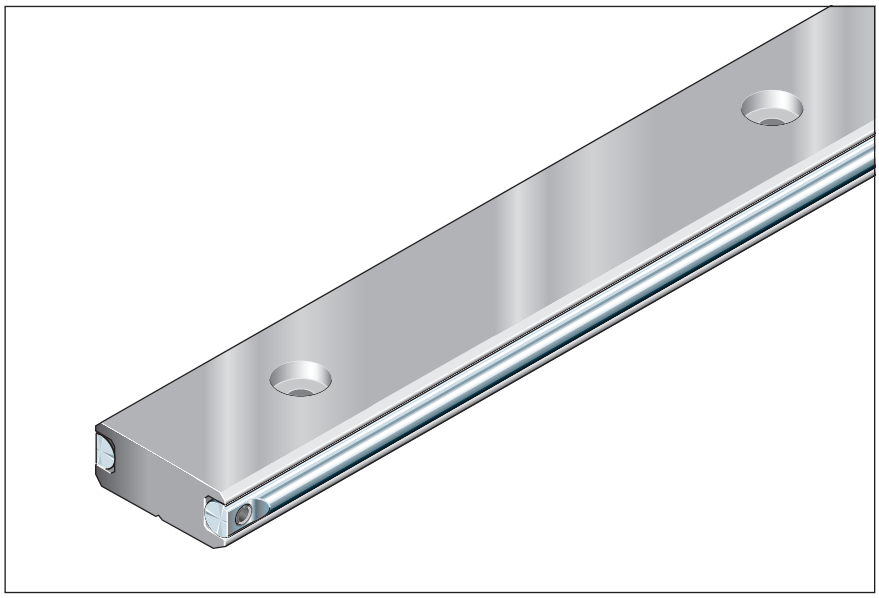

Part numbers, lengths

Guide Rail, low profile			without holes	with holes
Size	Standard length[1] (mm)	L_{max} (mm)	Part number Length:,...(mm)	Part number Length:,...(mm)
32	3500	7000	R1924 032 31,...	R1924 132 31,...
32-2	3500	7000	–	R1924 232 31,...
52	3500	7000	R1924 052 31,...	R1924 152 31,...
52-2	3500	7000	–	R1924 252 31,...
52-4	3500	7000	–	R1924 452 31,...

1) Running tracks up to 3500 mm are made of one-piece precision steel shafts.

Size -Version	Hole spacing T (mm)	Recommended rail lengths Number of holes/Rail lenth L (mm)			
32-2, 52-4	62,5	2/121	10/621	18/1121	40/2496
		4/246	12/746	20/1246	50/3125
		6/371	14/871	24/1496	56/3496
		8/496	16/996	30/1871	
32, 52-2	125	2/246	10/1246	18/2246	28/3496
		4/496	12/1496	20/2496	
		6/746	14/1746	22/2746	
		8/996	16/1996	24/2996	
52	250	2/496	6/1496	14/3496	
		3/746	8/1996		
		4/996	10/2496		
		5/1246	12/2996		

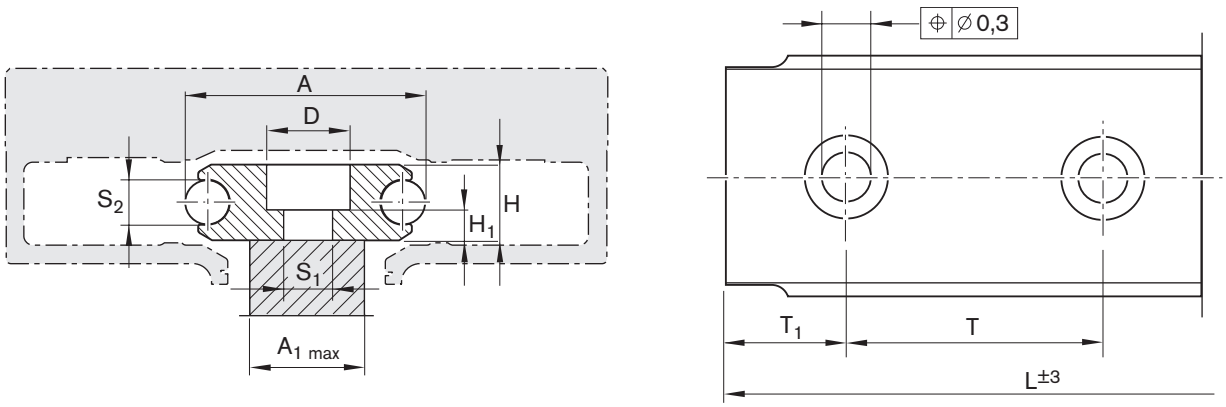

Shown rotated through 90°
Mounting hole drilling pattern not to scale

Size -Version	Dimensions (mm) A	$A_{1\ max}$	H	H_1	H_2	D	S_1	S_2	T	T_{1S}	$T_{1\ min.}$	Mass (kg)
32	32	19	10	3,5	5	11	6,5	6	125,00	60,50	13	1,1
32-2	32	19	10	3,5	5	11	6,5	6	62,50	29,25	13	1,1
52	52	32	18	7,0	9	20	11,0	10	250,00	123,00	20	3,1
52-2	52	32	18	7,0	9	20	11,0	10	125,00	60,50	20	3,1
52-4	52	32	18	7,0	9	20	11,0	10	62,50	29,25	20	3,1

Ordering a guide rail

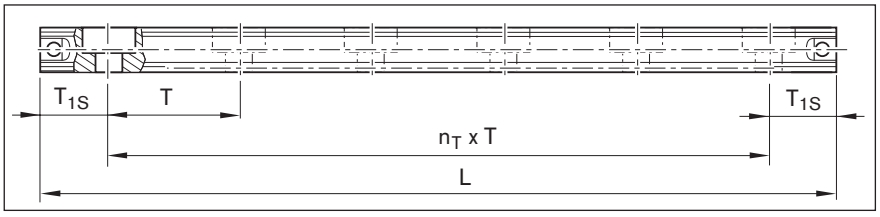

Calculating guide rail length
Recommendation:
Use preferred length T_{1S}.
- Observe minimum spacing $T_{1\ min}$! (see table)
- T_1 is the same at either end of the rail.

$L = n_B \cdot T - 4$
or
$L = n_T \cdot T + 2 \cdot T_{1S}$

L = rail length (mm)
T = hole spacing*) (mm)
T_{1S} = preferred dimension*) (mm)
n_B = number of holes
n_T = number of spaces
*) see table for values

Ordering example

Guide rail: size 25
Desired length: 620 to 625 mm
n_B = 620/T = 620/62.5 = 9.92
rounded to whole numbers
= 10 holes,
n_T = n_B - 1 = 9

Rail ordering data:
Part number, length (mm)
T_1 / n_T x T / T_1 (mm))
R1924 232 31, 621
29,25 / 9 x 62,5 / 29,25

Length to be ordered

L = 10 · 62.5 - 4 = 621 mm or
L = 9 · 62.5 + 2 · 29.25 = 621 mm

Single/Double Bearing Runner Blocks with Adjustment Screws

Single Bearing Runner Blocks R1903

Special features:

- Freely selectable carriage structure spacing.
- Zero-clearance adjustment using socket hex screws (1) on the rear side of the runner blocks.
- Tough all-round sealing gives excellent wiper performance.
  Grease lubricant recommended.

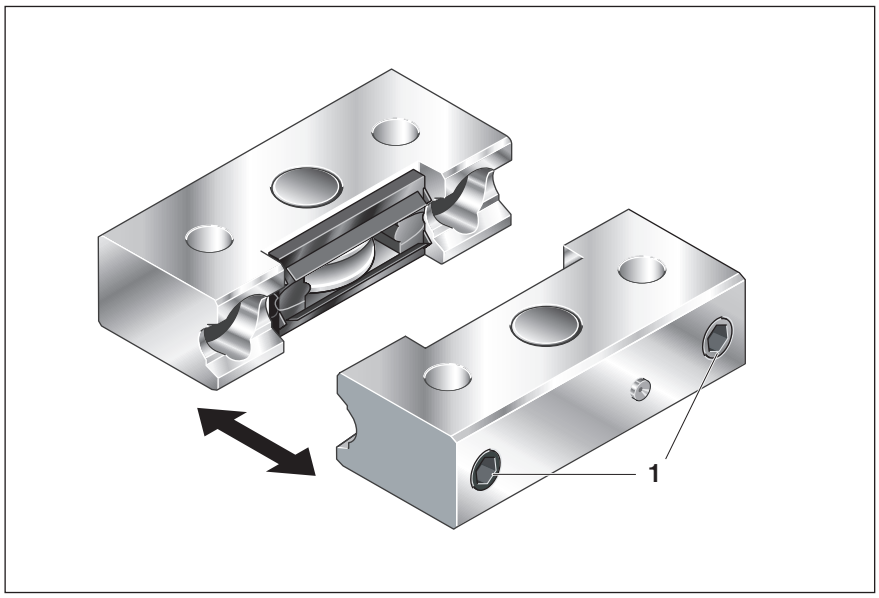

Part numbers,
Load capacities and moment loads for calculating service life
when using four single bearing runner blocks

		Load capacities				Moment loads					
		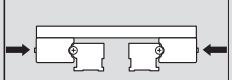		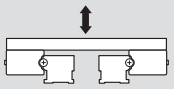		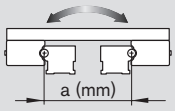		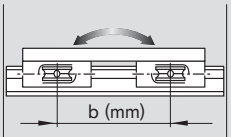		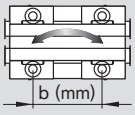	
Size -Version	**Part number**	C_y (N)	C_{y0} (N)	C_z (N)	C_{zo} (N)	M_x (Nm)	M_{xo} (Nm)	M_y (Nm)	M_{yo} (Nm)	M_z (Nm)	M_{zo} (Nm)
32	R1903 132 10	7335	4560	4300	2200	2,1 · a	1,1 · a	2,1 · b	1,1 · b	3,6 · b	2,2 · b
52	R1903 152 10	17150	10200	10050	4900	5,0 · a	2,4 · a	5,0 · b	2,4 · b	8,5 · b	5,1 · b
52-h	R1903 252 10	27900	15400	16775	7630	8,3 · a	3,8 · a	8,3 · b	3,8 · b	13,9 · b	7,6 · b
52-sh	R1903 352 10	31000	18200	18400	8750	9,3 · a	4,4 · a	9,2 · b	4,3 · b	15,5 · b	9,1 · b

Advantage
The adjustment screws provide for zero-clearance running.
These screws can be used to rotate the runner block slightly about the z axis or shift it along the y axis to obtain optimal alignment.

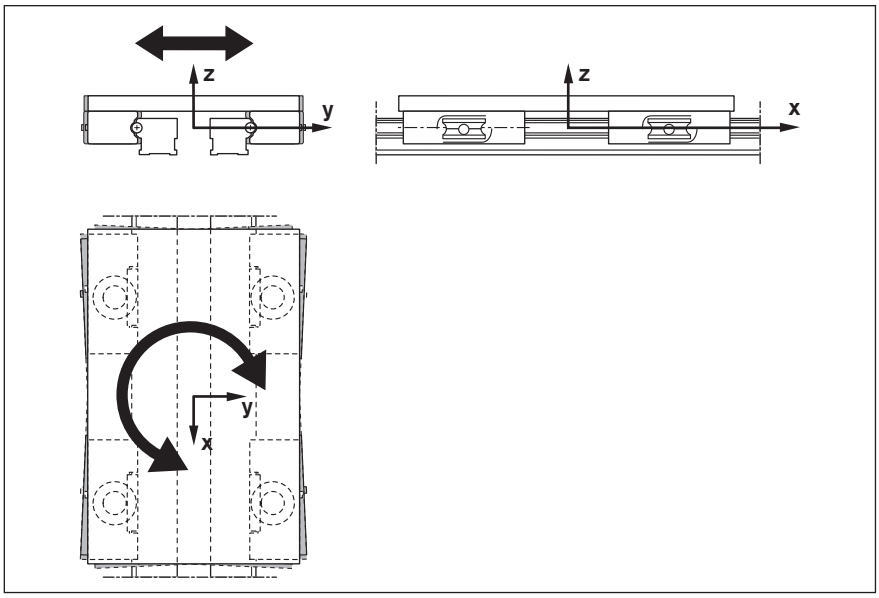

Important:

Observe maximum permissible loads due to forces and moments as shown in the "Maximum Permissible Loads" tables!

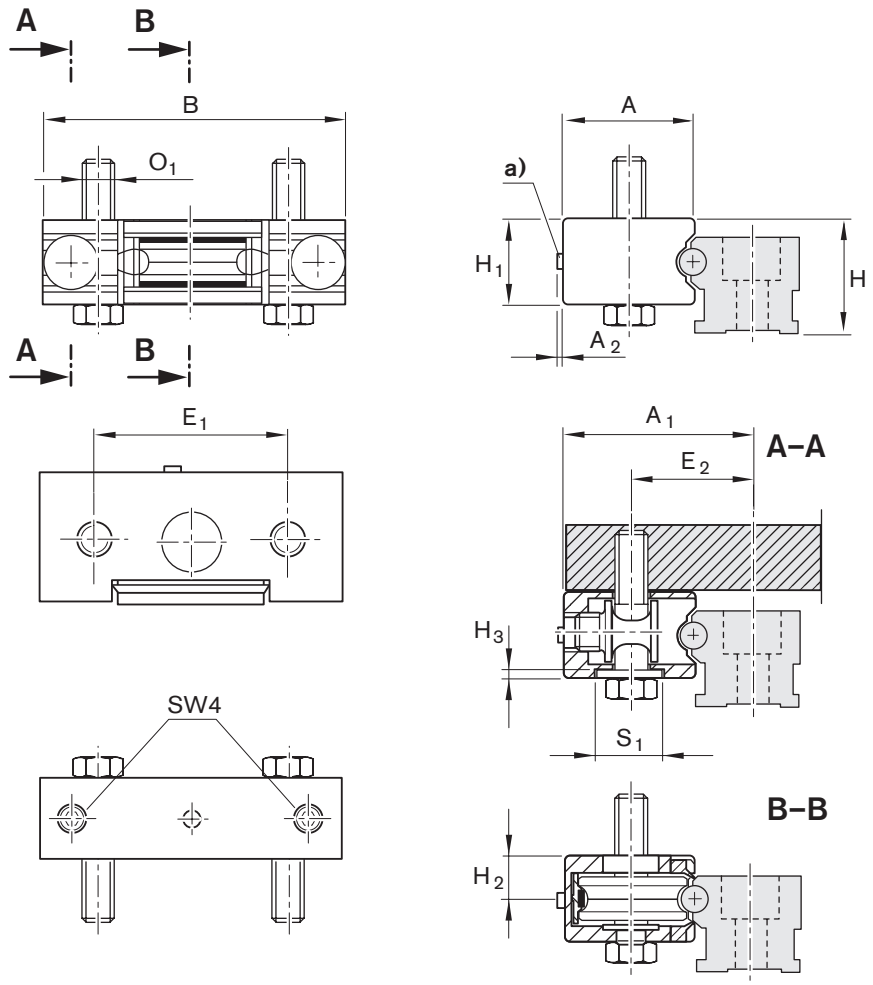

a) Funnel-type lube nipple ø 3 mm

Size-Version	Dimensions (mm) A	A_1	A_2	B	H	H_1	H_2	H_3	E_1	E_2	S_1	O_1[1)]	Mass (kg)
32	31,0	43,0	2	87,0	26	20,5	11,0	2,5	54	27,0	18	M8	0,13
52	44,5	65,0	2	104,0	40	29,5	14,9	2,5	66	42,0	22	M10	0,34
52-h	52,0	72,5	2	118,5	42	33,5	16,9	3,0	76	45,0	26	M12	0,51
52-sh	57,0	77,5	2	123,5	42	33,5	16,9	3,0	81	47,5	26	M12	0,61

1) Mounting screws are not included in the supply.
For screws to ISO 4014 8.8, install a washer to ISO 7089

Single/Double Bearing Runner Blocks with Adjustment Screws

Single Bearing Runner Blocks R1904

Special features:

- Freely selectable carriage structure spacing.
- Zero-clearance adjustment using socket hex screws (1) on the rear side of the runner blocks.
- Tough all-round sealing gives excellent wiper performance.
  Grease lubricant recommended.

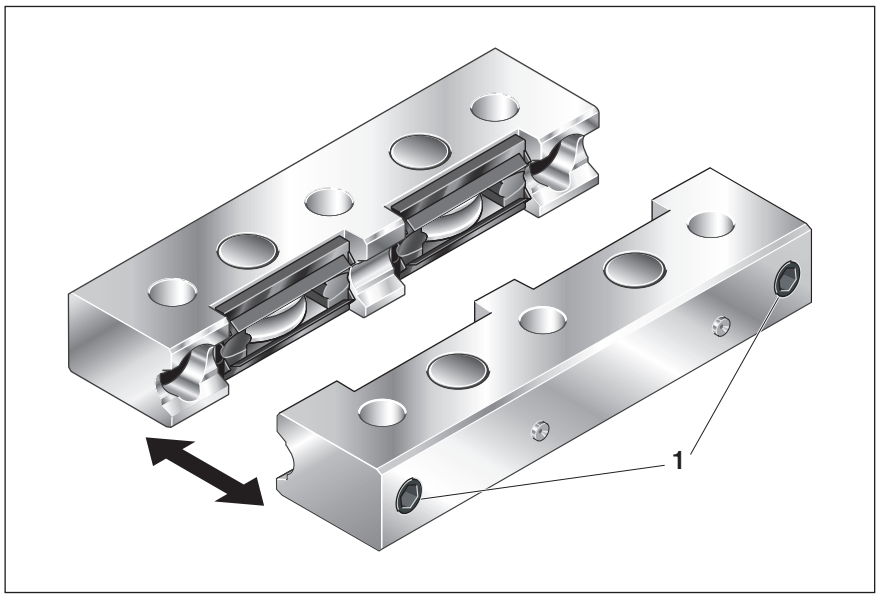

Part numbers,
Load capacities and moment loads for calculating service life
when using two double bearing runner blocks

		Load capacities				Moment loads					
						a (mm)					
Size -Version	**Part number**	C_y (N)	C_{y0} (N)	C_z (N)	C_{zo} (N)	M_x (Nm)	M_{xo} (Nm)	M_y (Nm)	M_{yo} (Nm)	M_z (Nm)	M_{zo} (Nm)
32	R1904 132 10	7335	4560	4300	2200	2,1 · a	1,1 · a	105	55	180	110
52	R1904 152 10	17150	10200	10050	4900	5,0 · a	2,4 · a	330	158	561	337
52-h	R1904 252 10	27900	15400	16775	7630	8,3 · a	3,8 · a	631	289	1056	578
52-sh	R1904 352 10	31000	18200	18400	8750	9,3 · a	4,4 · a	740	350	1260	740

Advantage
The adjustment screws provide for zero-clearance running.
These screws can be used to rotate the runner block slightly about the z axis or shift it along the y axis to obtain optimal alignment.

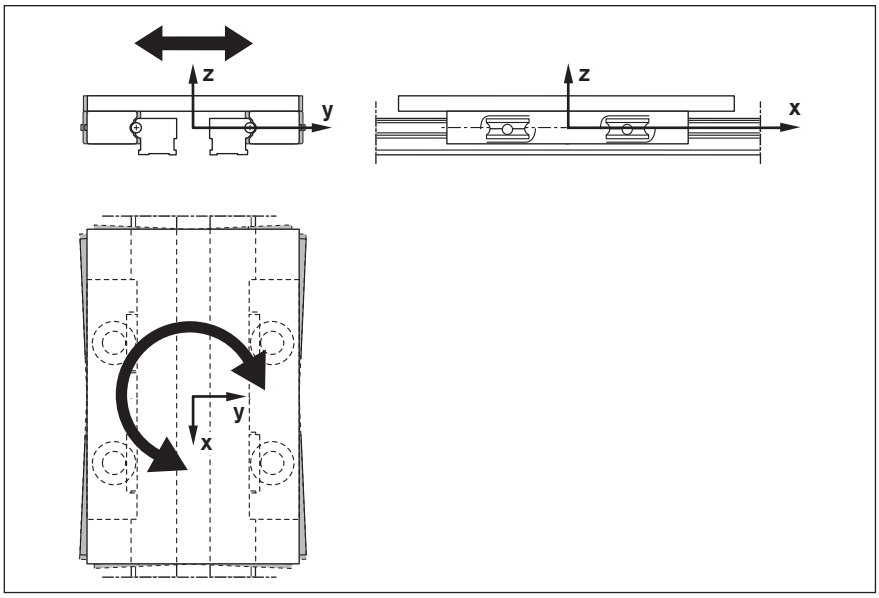

Important:

Observe maximum permissible loads due to forces and moments as shown in the "Maximum Permissible Loads" tables!

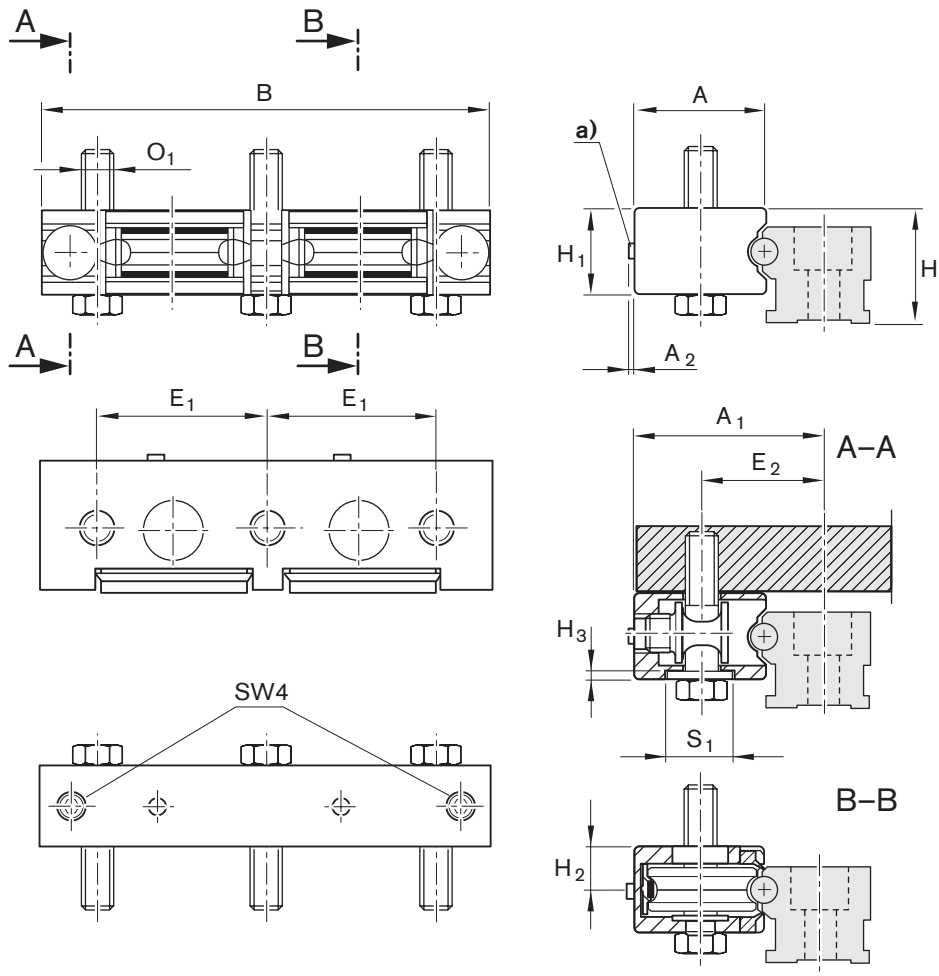

a) Funnel-type lube nipple ø 3 mm

Size-Version	Dimensions (mm) A	A_1	A_2	B	H	H_1	H_2	H_3	E_1	E_2	S_1	O_1[1]	Mass (kg)
32	31,0	43,0	2	129,0	26	20,5	11,0	2,5	48,0	27,0	18	M8	0,20
52	44,5	65,0	2	159,0	40	29,5	14,9	2,5	60,5	42,0	22	M10	0,53
52-h	52,0	72,5	2	184,5	42	33,5	16,9	3,0	71,0	45,0	26	M12	0,82
52-sh	57,0	77,5	2	194,5	42	33,5	16,9	3,0	76,0	47,5	26	M12	1,01

1) Mounting screws are not included in the supply.
For screws to ISO 4014 8.8, install a washer to ISO 7089

Guide Rails for Bearing Runner Blocks

Guide Rail
standard half-rail R1925

- For mounting from above
- Optional mounting hole plugs
- Corrosion resistant steel shafts to DIN EN ISO 683-17 / EN 10088

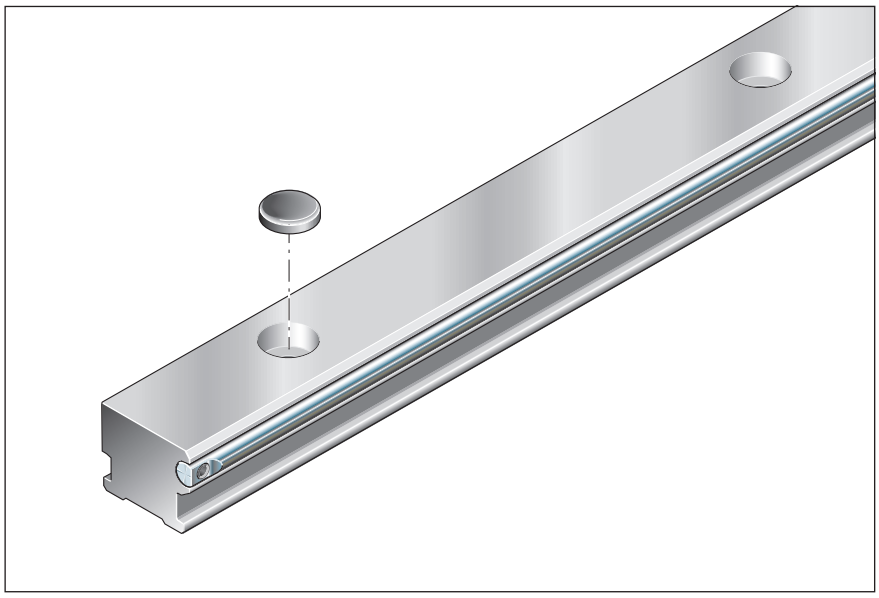

Part numbers, lengths

Guide rail: standard half-rail			without holes	with holes	Mounting hole plugs (optional)	
Size -Version	Standard length[1] (mm)	L_{max} (mm)	Part number Length:,...(mm)	Part number Length:,...(mm)	Part number Quantity:,...	Holes per meter[2]
32	3500	7000	R1925 032 31,...	R1925 132 31,...	R1605 200 80,...	8
32-2			–	R1925 232 31,...	R1605 200 80,...	16
52			R1925 052 31,...	R1925 152 31,...	R1605 400 90,...	4
52-2			–	R1925 252 31,...	R1605 400 90,...	8
52-4			–	R1925 452 31,...	R1605 500 90,...	16

1) Running tracks up to 3500 mm are made of one-piece precision steel shafts.
2) Number for one meter at preferred length T_{1S}

Size -Version	Hole spacing T (mm)	Recommended rail length Number of holes/Rail length L (mm)			
32-2, 52-4	62,5	2/121	10/621	18/1121	40/2496
		4/246	12/746	20/1246	50/3125
		6/371	14/871	24/1496	56/3496
		8/496	16/996	30/1871	
32, 52-2	125	2/246	10/1246	18/2246	28/3496
		4/496	12/1496	20/2496	
		6/746	14/1746	22/2746	
		8/996	16/1996	24/2996	
52	250	2/496	6/1496	14/3496	
		3/746	8/1996		
		4/996	10/2496		
		5/1246	12/2996		

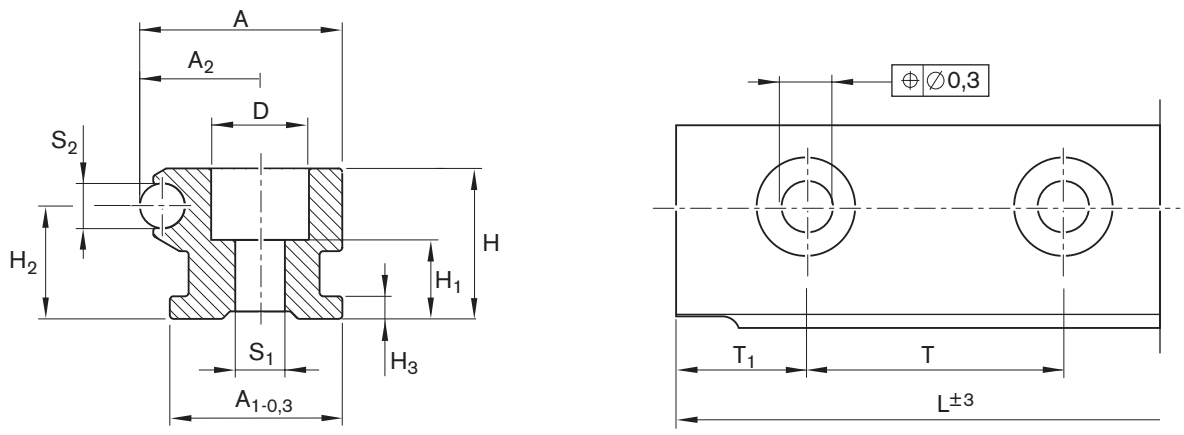

Shown rotated through 90°
Mounting hole drilling pattern not to scale

Size -Version	Dimensions (mm) A	A_1	A_2	H	H_1	H_2	H_3	D	S_1	S_2	T	T_{1S}	$T_{1\ min.}$	Mass (kg/m)
32	26	22	16	20	9,5	15,0	3	11,0	6,5	6	125,0	60,50	13	1,3
32-2	26	22	16	20	9,5	15,0	3	11,0	6,5	6	62,5	29,25	13	1,3
52	42	36	26	34	19,0	25,1	5	20,0	11,0	10	250,0	123,00	20	3,5
52-2	42	36	26	34	19,0	25,1	5	20,0	11,0	10	125,0	60,50	20	3,5
52-4	42	36	26	34	17,0	25,1	5	24,0	13,0	10	62,5	29,25	20	3,5

Ordering a guide rail

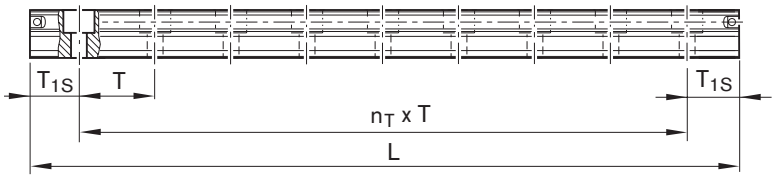

Calculating guide rail length

Recommendation:
Use preferred length T_{1S}.
- Observe minimum spacing $T_{1\ min}$! (see table)
- T_1 is the same at either end of the rail.

$L = n_B \cdot T - 4$
or
$L = n_T \cdot T + 2 \cdot T_{1S}$

L = rail length (mm)
T = hole spacing*) (mm)
T_{1S} = preferred dimension*) (mm)
n_B = number of holes
n_T = number of spaces
*) see table for values

Ordering example

Guide rail: size 25
Desired length: 620 to 625 mm
n_B = 620/T = 620/62.5 = 9.92
rounded to whole numbers
= 10 holes,
n_T = n_B - 1 = 9

Rail ordering data:
Part number, length (mm)
T_1 / n_T x T / T_1 (mm)
R1925 232 31, 621
29,25 / 9 x 62,5 / 29,25
Mounting hole plug ordering data:
Part number, quantity
R1605 200 90, 10

Length to be ordered

L = 10 · 62.5 - 4 = 621 mm or
L = 9 · 62.5 + 2 · 29.25 = 621 mm

Guide Rails for Bearing Runner Blocks

Guide Rail
low-profile, half-rail R1926

- For mounting from above
- Corrosion resistant steel shafts to DIN EN ISO 683-17 / EN 10088

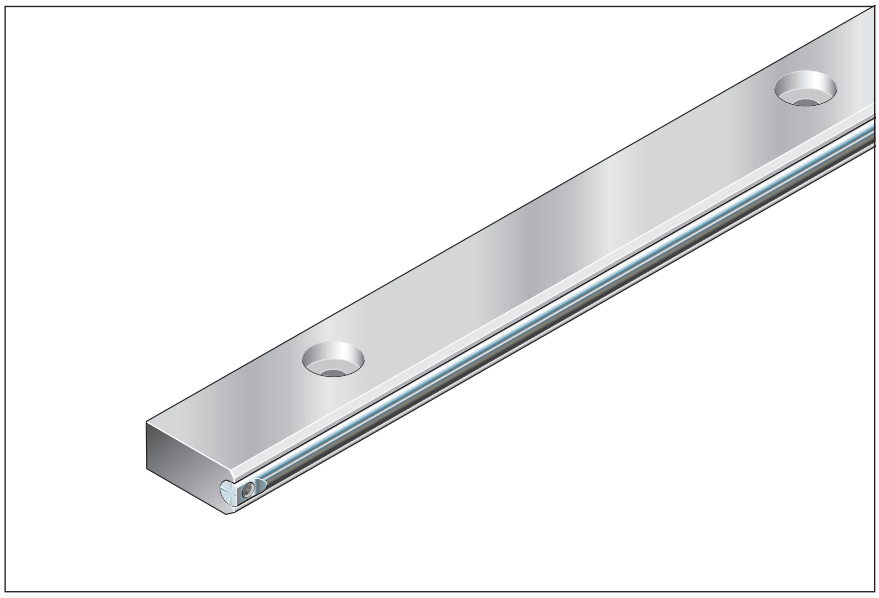

Part numbers, lengths

Guide rail: low-profile, half-rail			without holes	with holes
Size -Version	Standard length[1] (mm)	L_{max} (mm)	Part number Length:,...(mm)	Part number Length:,...(mm)
32	3500	7000	R1926 032 31,...	R1926 132 31,...
32-2			–	R1926 232 31,...
52			R1926 052 31,...	R1926 152 31,...
52-2			–	R1926 252 31,...
52-4			–	R1926 452 31,...

1) Running tracks up to 3500 mm are made of one-piece precision steel shafts.

Size -Version	Hole spacing T (mm)	Recommended rail length Number of holes/Rail length L (mm)			
32-2, 52-4	62,5	2/121	10/621	18/1121	40/2496
		4/246	12/746	20/1246	50/3125
		6/371	14/871	24/1496	56/3496
		8/496	16/996	30/1871	
32, 52-2	125	2/246	10/1246	18/2246	28/3496
		4/496	12/1496	20/2496	
		6/746	14/1746	22/2746	
		8/996	16/1996	24/2996	
52	250	2/496	6/1496	14/3496	
		3/746	8/1996		
		4/996	10/2496		
		5/1246	12/2996		

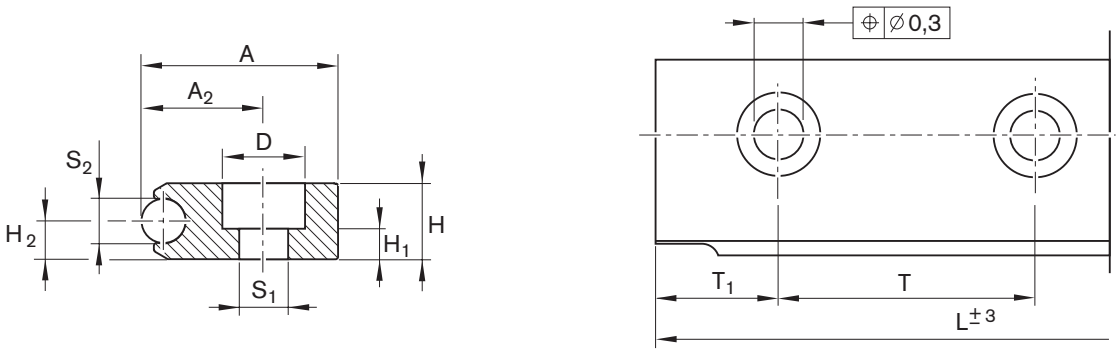

Size -Version	Dimensions (mm) A	A_2	H	H_1	H_2	D	S_1	S_2	T	T_{1S}	$T_{1\ min.}$	Mass (kg/m)
32	26	16	10	3,5	5	11,0	6,5	6	125,0	60,50	13	0,8
32-2	26	16	10	3,5	5	11,0	6,5	6	62,5	29,25	13	0,8
52	42	26	18	7,0	9	20,0	11,0	10	250,0	123,00	20	2,3
52-2	42	26	18	7,0	9	20,0	11,0	10	125,0	60,50	20	2,3
52-4	42	26	18	7,0	9	24,0	13,0	10	62,5	29,25	20	2,3

Ordering a guide rail

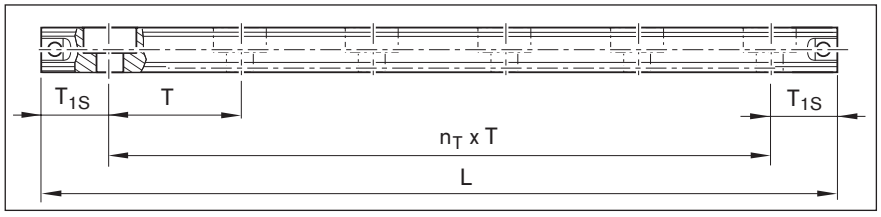

Calculating guide rail length

Recommendation:
Use preferred length T_{1S}.
- Observe minimum spacing $T_{1\ min}$! (see table)
- T_1 is the same at either end of the rail.

$L = n_B \cdot T - 4$
or
$L = n_T \cdot T + 2 \cdot T_{1S}$

L = rail length (mm)
T = hole spacing*) (mm)
T_{1S} = preferred dimension*) (mm)
n_B = number of holes
n_T = number of spaces
*) see table for values

Ordering example

Guide rail: size 25
Desired length: 620 to 625 mm
n_B = 620/T = 620/62.5 = 9.92 rounded to whole numbers = 10 holes,
n_T = n_B - 1 = 9

Rail ordering data:
Part number, length (mm)
T_1 / n_T x T / T_1 (mm)
R1926 232 31, 621
29,25 / 9 x 62,5 / 29,25

Length to be ordered

L = 10 · 62.5 - 4 = 621 mm or
L = 9 · 62.5 + 2 · 29.25 = 621 mm

Guide Rails for Bearing Runner Blocks

Guide Rail wide R1927

- For mounting from above
- Optional mounting hole plugs
- Corrosion resistant steel shafts to DIN EN ISO 683-17 / EN 10088

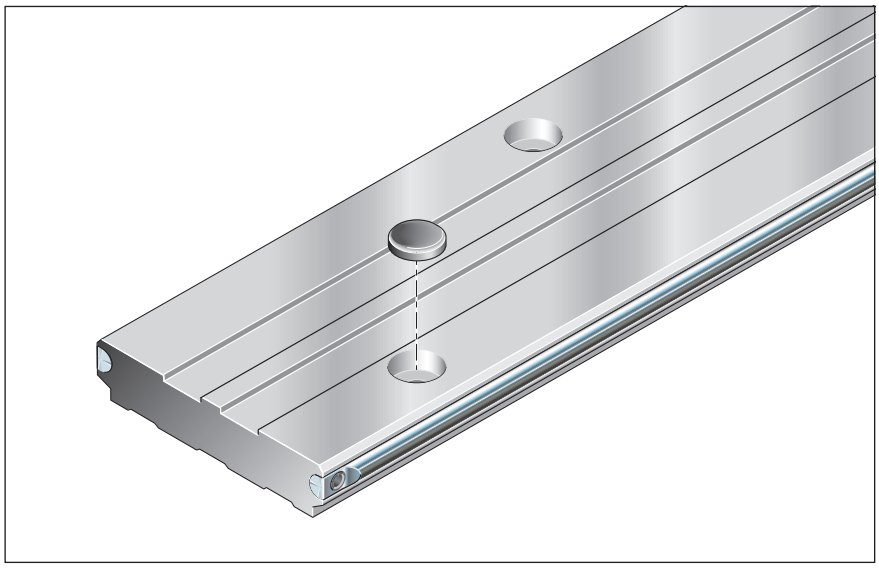

Part numbers, lengths

Guide rail: wide			without holes	with holes	Mounting hole plugs (optional)	
Size -Version	Standard length[1] (mm)	L_{max} (mm)	Part number Length:,...(mm)	Part number Length:,...(mm)	Part number Quantity:,...	Holes per meter[2]
52/120	3500	7000	R1927 052 31,...	R1927 152 31,...	R1605 400 90,...	8

1) Running tracks up to 3500 mm are made of one-piece precision steel shafts
2) Number for one meter at preferred length

Ordering a guide rail

Wherever possible, use the recommended rail lengths (1.).
Intermediate lengths (2.) or special lengths (3.) may also be manufactured on request.
Please check at $T_1 > T$.

L = rail length (mm)
n_B = number of holes (both rows)
n_T = number of spaces between holes ($n_T = n_B - 1$)
T_1, T_2 = end spaces, see drawings (mm)
T = hole spacing (125 mm)

Ordering data

1. Recommended rail length:
   Odd number of holes n_B
   $T_1 \neq T_2$

Preferred dimensions T_1: 60.5 mm, T_2: 185.5 mm

By turning the rail over it is possible to alternate between mounting hole pattern 1a) and 1b). When this is done, T_1 becomes T_2 and vice versa.

Rail ordering data:
Part number, length L (mm)
T_1 / n_T x T / T_2 (mm)

Mounting hole plug ordering data:
Part number, quantity = n_B
Example: R1605 400 90, 11

1 a)

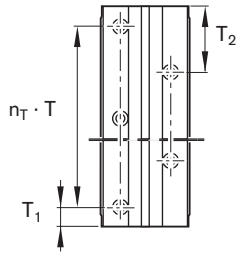

1 b)

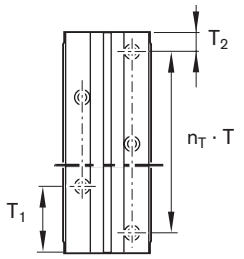

Calculating the rail length

- Observe minimum spacing $T_{1,2\,min}$! (see table)

(1) $L = n_B \cdot 125 - 4$
or
(2) $L = n_T \cdot 125 + 121$

Example:
(1) L = 11 · 125 - 4 = 1371 mm or
(2) L = 10 · 125 + 121 = 1371 mm

Ordering example for recommended rail length

R1927 152 31, 1371
60,5 / 10 x 125 / 185,5

Number of holes $n_B = 11$
Number of spaces between holes $n_T = 10$

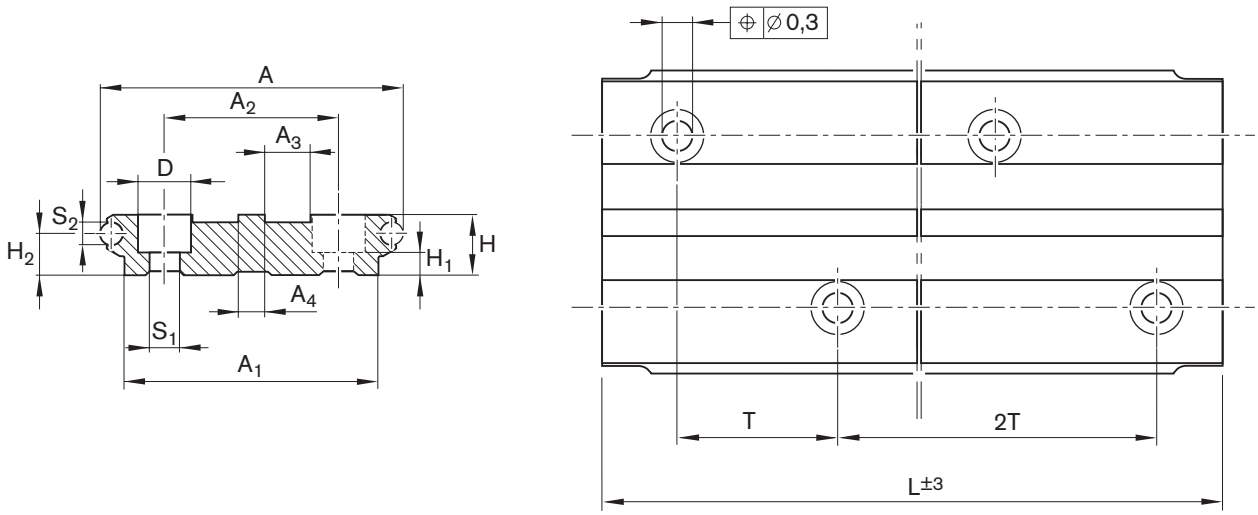

Shown rotated through 90°
Mounting hole drilling pattern not to scale

Size -Version	Dimensions (mm) A	A_1	A_2	A_3	A_4	H	H_1	H_2	D	S_1	S_2	T	$T_{1,2\ min.}$	Mass (kg/m)
52/120	120	100	68	18	10	25	10	16,1	20	11	10	125	13	7,8

2. Intermediate length:
Even number of holes n_B

The mounting hole drilling pattern remains the same when the rail is turned over.
Dimensions T_1 and T_2 remain the same and can therefore not be matched to a different pre-drilled hole pattern.
$T_1 = T_2 = 60.5$ mm or
$T_1 = T_2 = 185.5$ mm
(preferred dimensions)
Calculate the length according to item 1. "Recommended rail length"

2 a)

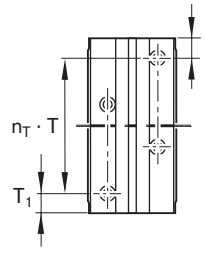

Ordering example: Rail 2a:
R1927 152 31, 1496 mm
60,5 / 11 x 125 / 60,5

2 b)

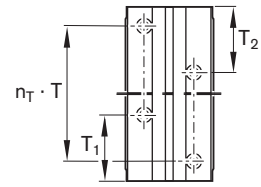

Ordering example: Rail 2b:
R1927 152 31, 1496 mm
185,5 / 11 x 125 / 185,5

3. Special length:
Odd (3a) or even (3b)
number of holes n_B

If the preferred dimensions T_1 and T_2 cannot be used (neither the recommended rail lengths nor intermediate lengths), determine T_1 and T_2 as required.
T_1 and T_2 must not fall within the following ranges:
0 to 13 and 112 to 139 mm

3 a)

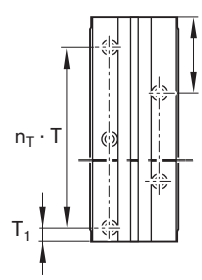

Ordering example: Rail 3a:
R1927 152 31, 1305 mm
20 / 10 x 125 / 160

3 b)

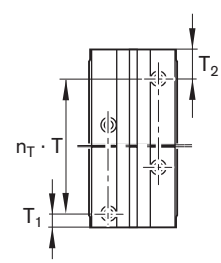

Ordering example: Rail 3b:
R1927 152 31, 1435 mm
20 / 11 x 125 / 40

U-type Cam Roller Guides

U-type Runner Block R1905

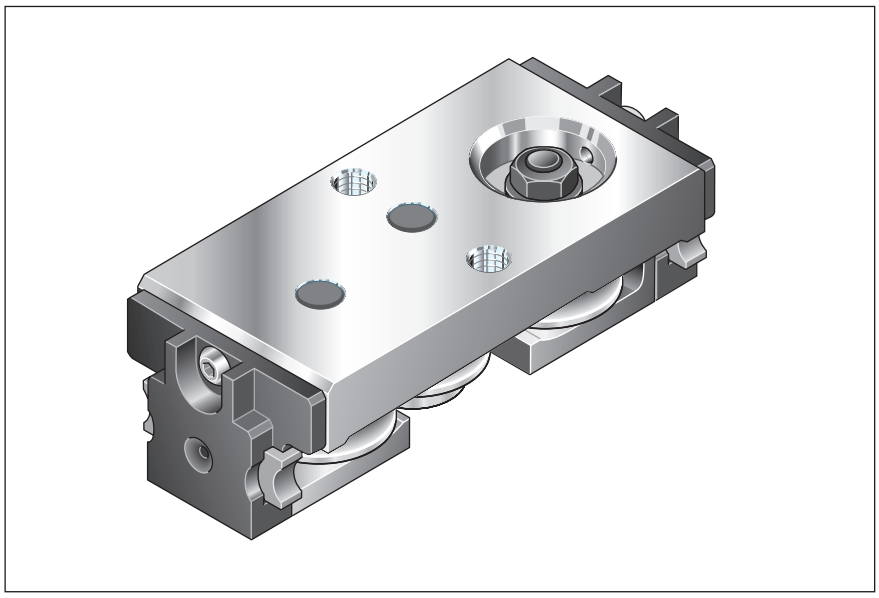

Part numbers,
Load capacities and moment loads for calculating service life

		Load capacities				Moment loads					
Size -Version	Part number	C_y (N)	C_{y0} (N)	C_z (N)	C_{zo} (N)	M_x (Nm)	M_{xo} (Nm)	M_y (Nm)	M_{yo} (Nm)	M_z (Nm)	M_{zo} (Nm)
20	R1905 119 00	1150	800	668	392	4,8	2,8	11,3	6,6	19,5	13,5

Important:

Observe maximum permissible loads due to forces and moments as shown in the "Maximum Permissible Loads" tables!

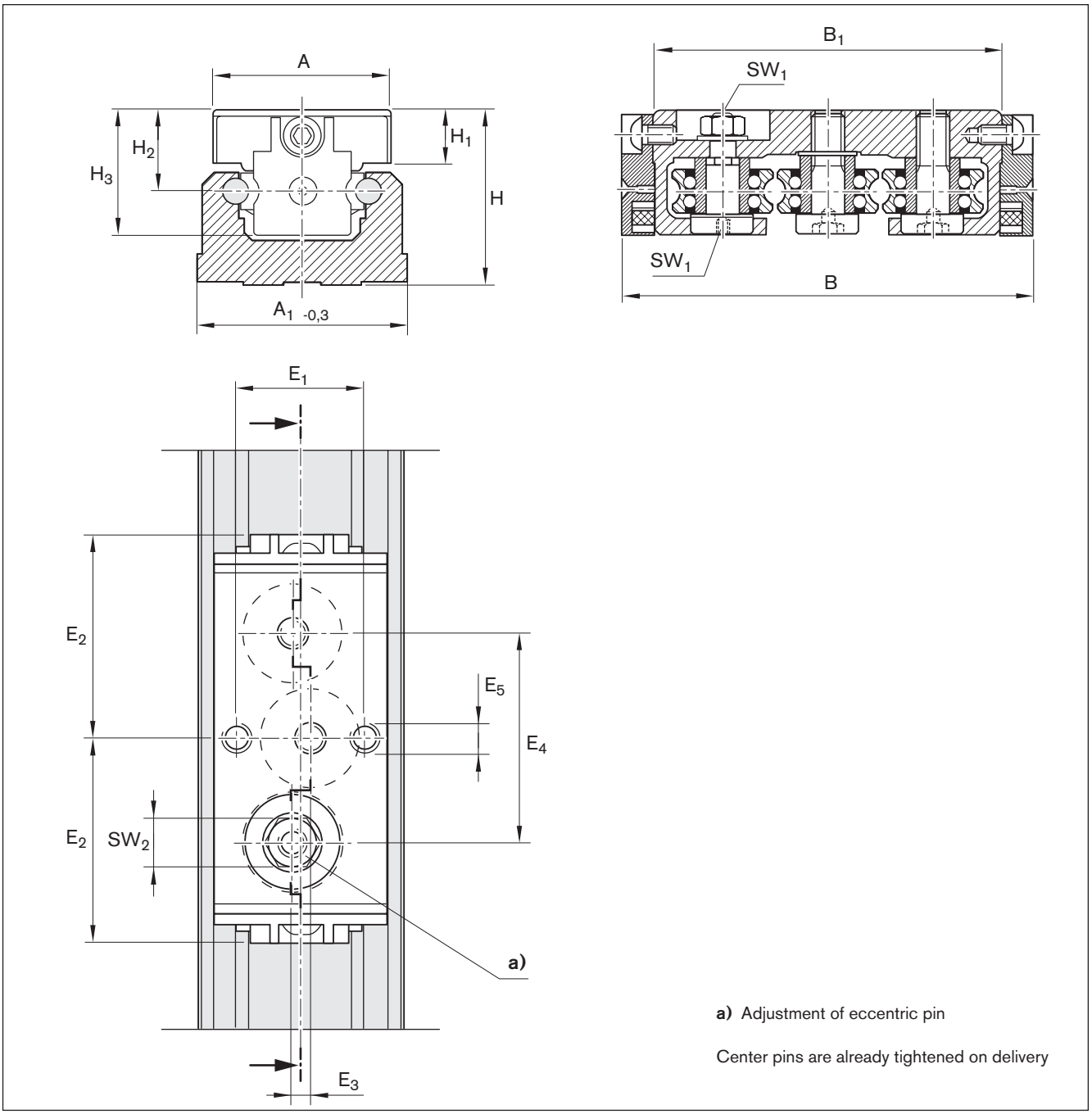

a) Adjustment of eccentric pin

Center pins are already tightened on delivery

Size -Version	Dimensions (mm) A	A_1	B	B_1	H	H_1	H_2	H_3	E_1	E_2	E_3	E_4	E_5	SW_1	SW_2	Mass (kg)
20	28	33	66	56	28	8,5	13	20	20	33	3	34	M5	2	7	0,08

U-type Cam Roller Guides

U-type Guide Rail R1923

- For mounting from above
- Corrosion resistant steel shafts to DIN EN ISO 683-17 / EN 10088

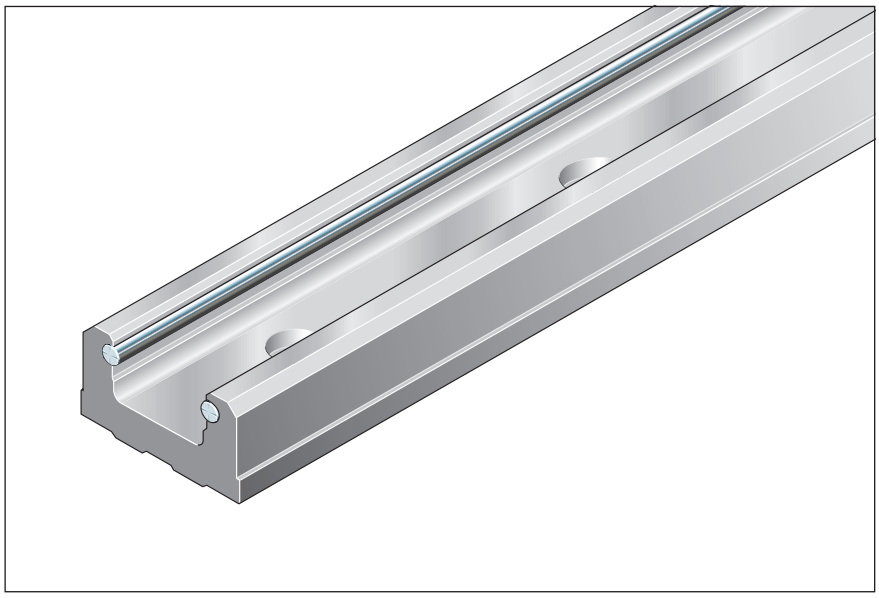

Part numbers, lengths

Guide Rail: U-type			without holes	with holes
Size	Standard length[1] (mm)	L_{max} (mm)	Part number Length:,...(mm)	Part number Length:,...(mm)
20	3500	7000	R1923 019 31,...	R1923 119 31,...

1) Running tracks up to 3500 mm are made of one-piece precision steel shafts

size -Version	Hole spacing T (mm)	Recommended rail length Number of holes/Rail length L (mm)			
20	62,5	2/121	10/621	18/1121	40/2496
		4/246	12/746	20/1246	50/3125
		6/371	14/871	24/1496	56/3496
		8/496	16/996	30/1871	

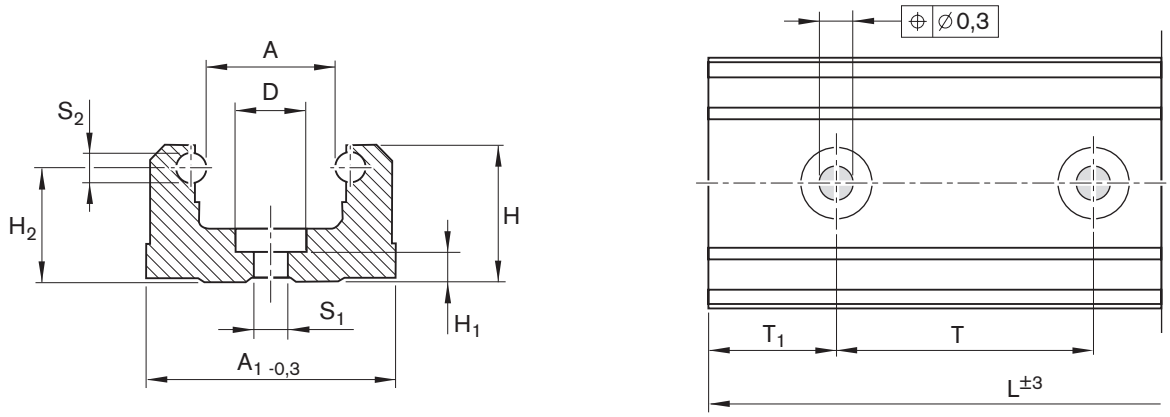

Shown rotated through 90°
Mounting hole drilling pattern not to scale

Size -Version	Dimensions (mm) A	A_1	H	H_1	H_2	D	S_1	S_2	T	T_{1S}	$T_{1\ min.}$	Mass (kg/m)
20	17	33	18	3,4	15	9,4	4	6	62,5	29,25	13	1,10

Ordering a guide rail

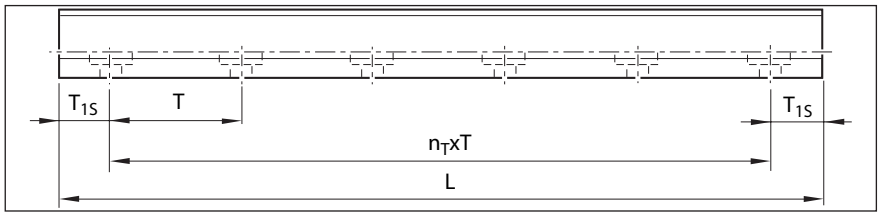

Calculating guide rail length

Recommendation:
Use preferred length T_{1S}.
- Observe minimum spacing $T_{1\ min}$! (see table)
- T_1 is the same at either end of the rail.

$L = n_B \cdot T - 4$
or
$L = n_T \cdot T + 2 \cdot T_{1S}$

L = rail length (mm)
T = hole spacing*) (mm)
T_{1S} = preferred dimension*) (mm)
n_B = number of holes
n_T = number of spaces
*) see table for values

Ordering example

Guide rail: size 25
Desired length: 620 to 625 mm
n_B = 620/T = 620/62.5 = 9.92 rounded to whole numbers = 10 holes,
n_T = n_B - 1 = 9

Rail ordering data:
Part number, length (mm)
T_1 / n_T x T / T_1 (mm)
R1923 119 31, 621
29,25 / 9 x 62,5 / 29,25

Length to be ordered

L = 10 · 62.5 - 4 = 621 mm or
L = 9 · 62.5 + 2 · 29.25 = 621 mm

Accessories

Dead stop R1910 5.. 00

The dead stop can be used with guide rails 1921- (standard),1922- (with T-slot) and 1924 (low-profile).
Holding force: 1500 N
If a set screw to ISO 7434 is used without a soft-metal pin, there will be a pressure point in the guide rail.
The resulting contour locking effect will increase the holding force.

The lubrication unit is reinforced in the area corresponding to the dead stop.

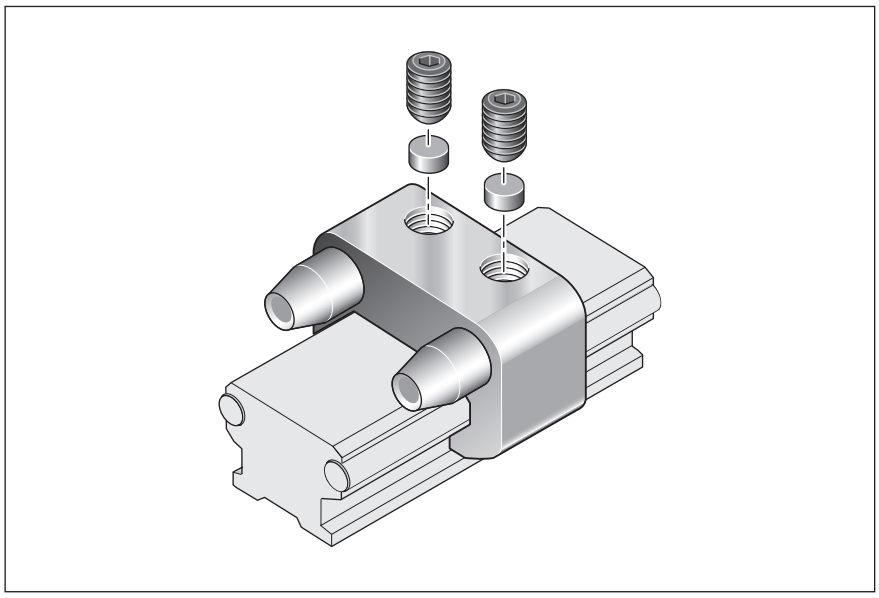

Dead stop	For guide rails	
Size	Part number	Part number
32	R1910 532 00,...	R1921, R1922, R1924
52	R1910 552 00,...	R1921, R1922, R1924

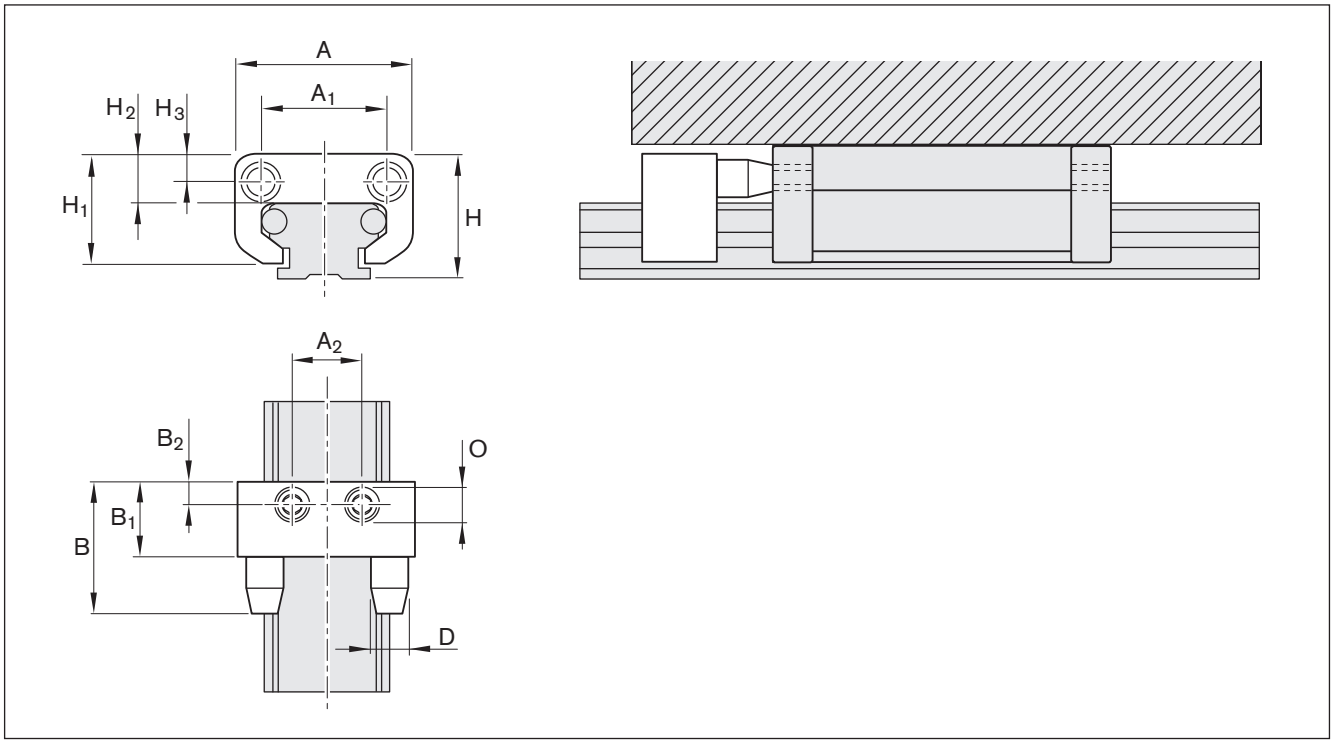

Size	Dimensions (mm)												Mass
-Version	A	A_1	A_2	B	B_1	B_2	D	H	H_1	H_2	H_3	O	(kg)
32	46	33	18	35	20	5,5	10	33,5	29	13	7,5	M8	0,05
52	70	46	32	43	23	5,5	16	53,0	42	18	9,0	M8	0,11

Lubrication unit R1910 442 00 for profile runner blocks

The R1910 442 00 lubrication unit was specially developed for the cam roller of the R1907 142 00 profile runner block. The lubrication unit must be filled with a lubricant oil CLP, CGLP as per DIN 51517 with a viscosity of VG 680–1000 mm^2/s as per DIN 51519.

- Fill a total of 3 cm^3 of lubricant oil per lubrication unit via lube nipple in two partial amounts of 1.5 cm^3 each at a distance of 30 min.

Four lubrication units are required for complete lubrication of the R1907 142 00 profile runner block.

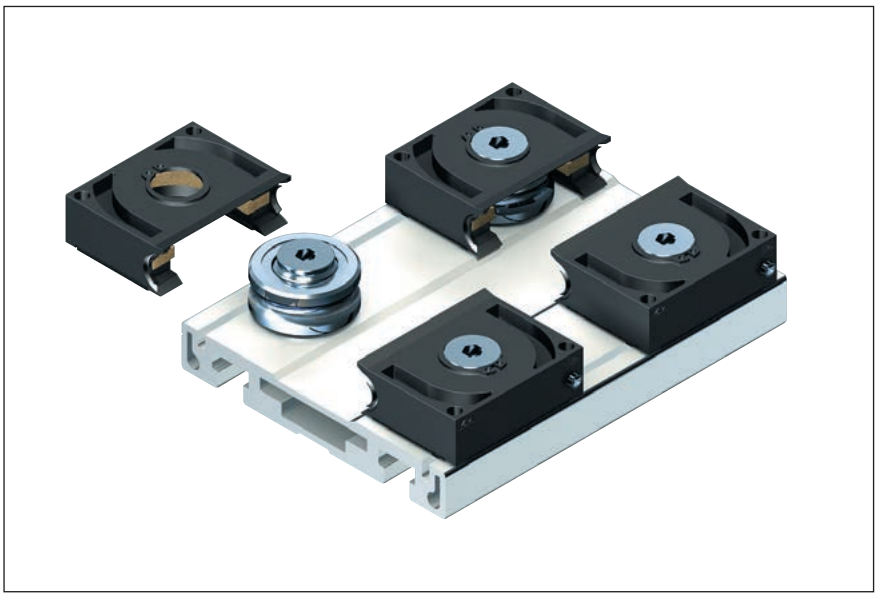

Lubrication unit	For profile runner blocks	
Size	Part number	Part number
42	R1910 442 00	R1907 142 00

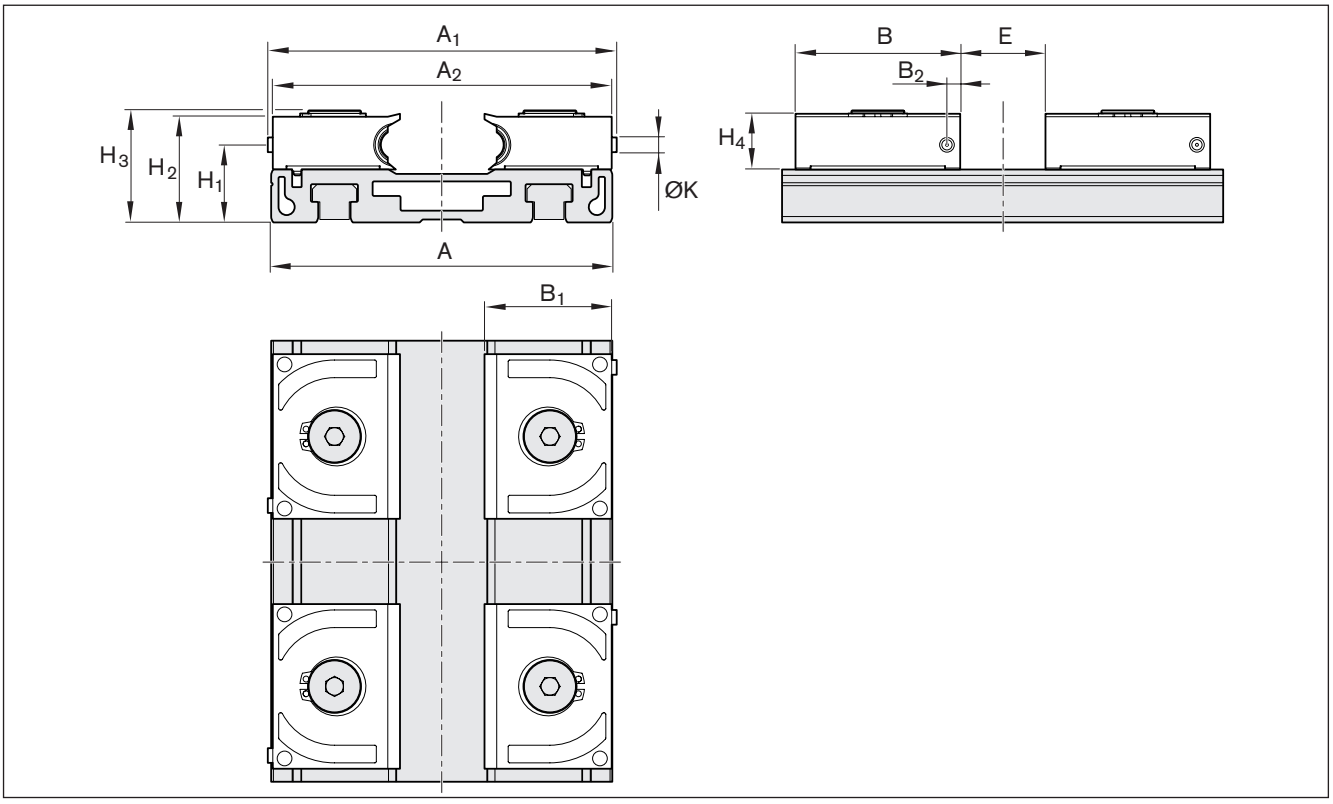

Size	Dimensions (mm)											
	A	A_1	A_2	B	B_1	B_2	H_1	H_2	H_3	H_4	E	K
42	116	118,65	115,25	56	43,25	4,5	26,25	35,8	38,1	18,8	29	5

Cam Rollers with Spigots, Assembly Kits

Cam Roller with eccentric spigot R1900 0

For mounting customer-built carriages, with central and eccentric spigots for zero-clearance adjustment to the guide rail.
For applications where even the versatile standard range does not offer the optimum solution to your problem.

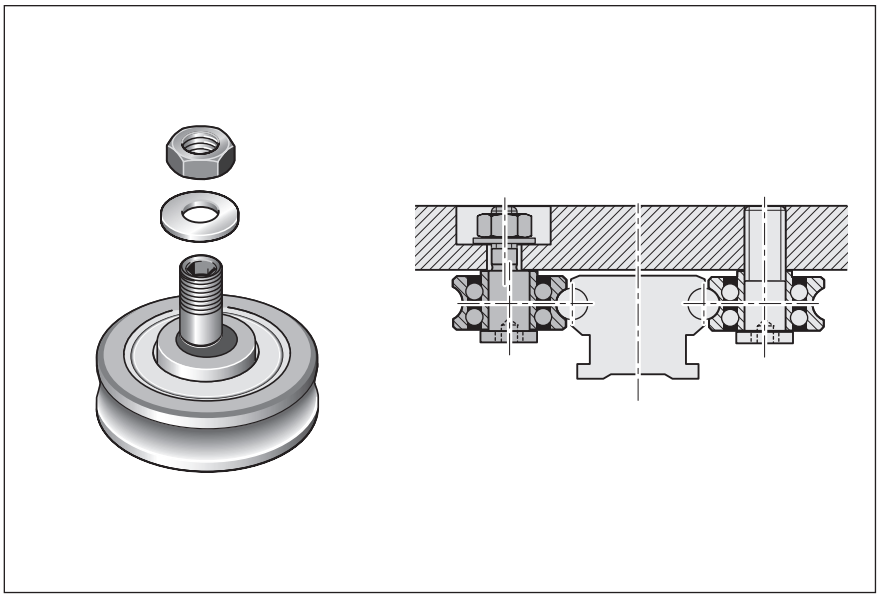

Part numbers
Load capacities for calculating service life
Maximum permissible loads

		Load capacities				Maximum permissible loads	
Size -Version	Part number	C_y (N)	C_{y0} (N)	C_z (N)	C_{zo} (N)	$F_{y\,max}$ (N)	$F_{z\,max}$ (N)
20	R1900 119 00	1150	800	330	190	350	100
25	R1900 125 00	1280	890	340	200	350	100
32	R1900 132 00	3670	2280	1080	550	550	180
52	R1900 152 00	8580	5100	2510	1230	2500	700
52-h	R1900 152 10	13950	7700	4190	1910	2600	800
52-sh	R1900 152 20	15500	9100	4600	2190	5300	1600

Dimensions

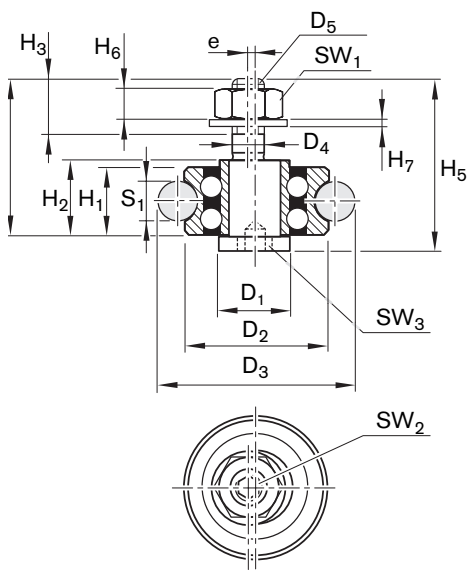

Size 20, 25, 32

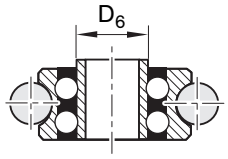

Size 52, 52-h, 52-sh

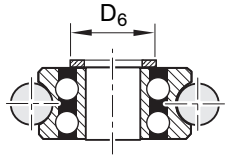

Size -Version	Dimensions (mm) D_1 g6	D_2	D_3	D_4 g6	D_5	D_6	H_1	H_2	H_3	H_4	H_5	H_6	H_7	SW_1	SW_2	SW_3	e	S_1
20	10	16	22,0	4	M4	9,0	7,0	8,5	4,6	16,0	19,5	3,2	0,8	7	2	2	0,45	4
25	10	17	27,0	4	M4	9,0	7,0	8,5	5,5	17,4	21,4	3,2	0,8	7	2	2	0,45	6
32	14	24	34,0	6	M6	11,8	11,0	12,5	7,0	25,5	29,0	5,2	1,6	10	3	4	0,90	6
52	20	35	51,3	10	M10	19,0	15,9	17,9	11,0	36,5	41,5	8,4	2,0	16	4	6	0,90	10
52-h	20	42	58,0	10	M10	19,0	19,0	21,0	11,0	44,3	50,3	8,4	2,0	16	4	6	0,90	10
52-sh	25	47	63,3	12	M12x1	24,0	19,0	21,0	13,0	44,3	50,3	10,8	2,5	18	6	8	0,90	10

Recommended hole spacing when using the following Cam Roller Guide Rails:

- Standard R1921
- With T-slot R1922
- Low-profile R1924-

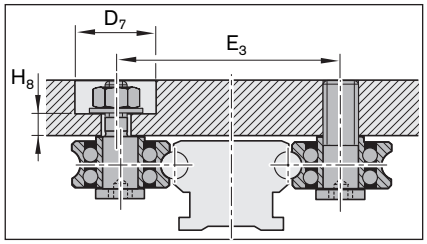

Size -Version	E_3 ± 0,2	D_7	H_8
20	33,8	15	3,0
25	39,8	15	3,6
32	54,0	18	5,5
52	83,3	30	7,3
52-h	90,0	30	11,8
52-sh	95,0	34	9,3

Cam Rollers with Spigots, Assembly Kits

Cam Roller with central spigot R1900 0

For mounting customer-built carriages, with central and eccentric spigots for zero-clearance adjustment to the guide rail.
For applications where even the versatile standard range does not offer the optimum solution to your problem.

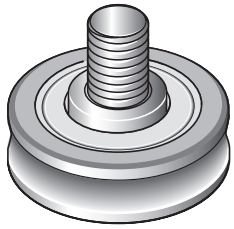

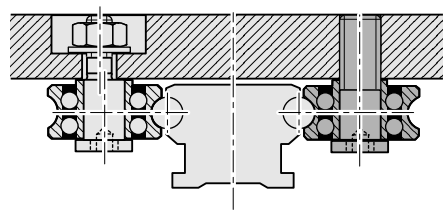

Part numbers
Load capacities for calculating service life
Maximum permissible loads

		Load capacities				Maximum permissible load	
Size -Version	**Part number**	C_y (N)	C_{y0} (N)	C_z (N)	C_{zo} (N)	$F_{y\,max}$ (N)	$F_{z\,max}$ (N)
20	R1900 119 01	1150	800	330	190	350	100
25	R1900 125 01	1280	890	340	200	350	100
32	R1900 132 01	3670	2280	1080	550	550	180
52	R1900 152 01	8580	5100	2510	1230	2500	700
52-h	R1900 152 11	13950	7700	4190	1910	2600	800
52-sh	R1900 152 21	15500	9100	4600	2190	5300	1600

Dimensions

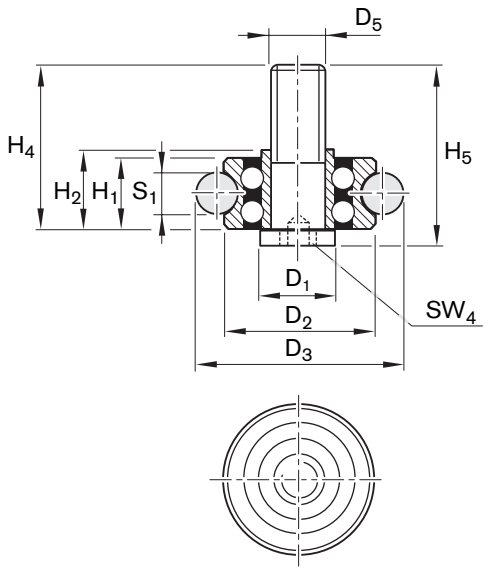

Size 20, 25, 32

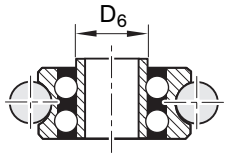

Size 52, 52-h, 52-sh

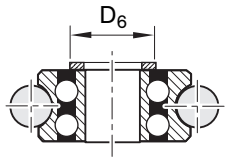

Size -Version	Dimensions (mm) D_1 g6	D_2	D_3	D_5	D_6	H_1	H_2	H_4	H_5	SW_4	S_1
20	10	16	22,0	M5	9,0	7,0	8,5	16,0	19,5	4	4
25	10	17	27,0	M5	9,0	7,0	8,5	17,4	21,4	4	6
32	14	24	34,0	M8	11,8	11,0	12,5	25,5	29,0	5	6
52	20	35	51,3	M10	19,0	15,9	17,9	36,5	41,5	8	10
52-h	20	42	58,0	M12	19,0	19,0	21,0	44,3	50,3	8	10
52-sh	25	47	63,3	M12	24,0	19,0	21,0	44,3	50,3	10	10

Recommended hole spacing when using the following Cam Roller Guide Rails:

- Standard R1921
- With T-slot R1922
- Low-profile R1924-

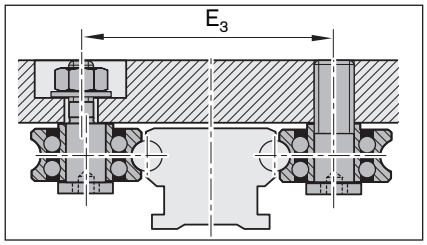

Size-Version	E_3 ± 0,2
20	33,8
25	39,8
32	54,0
52	83,3
52-h	90,0
52-sh	95,0

Bosch Rexroth AG
Ernst-Sachs-Straße 100
97424 Schweinfurt, Germany
Tel. +49 9721 937-0
Fax +49 9721 937-275
www.boschrexroth.com

Find your local contact person here:
www.boschrexroth.com/contact

R999000486/2018-12 replace
R310EN 2101 (2004-09)
© Bosch Rexroth AG 2018
Subject to revisions!

The data specified above only serve to describe the product.
As our products are constantly being further developed, no statements concerning a certain condition or suitability for a certain application can be derived from our information. The information given does not release the user from the obligation of own judgment and verification. It must be remembered that our products are subject to a natural process of wear and aging.